# ACME: A Body-Worn Multimodal Sensor Suite Enabling Autonomous Documentation of Prehospital Care

Tony K. Okeke[1], Ethan J. Moyer[1], Richard Moberg[1]
[1]Moberg Analytics, Inc., Philadelphia, PA, USA

## BACKGROUND

- Manual documentation during time-critical prehospital care diverts attention from patient management and yields incomplete care records.
- Autonomous documentation requires a passive, multimodal data-capture system that records medic actions, patient physiology, and resource use without disrupting workflows.
- No integrated, field-ready platform currently exists.

## OBJECTIVE

Develop a body-worn sensor suite that:

1. Passively acquires time-synchronized video, audio, and motion data from medic and patient vital signs.
2. Minimizes setup burden via NFC pairing.
3. Exports datasets for downstream task-identification and documentation algorithms.

## METHODS

- ACME was implemented as a **native Android application** to optimize bluetooth management and performance.
- ACME interfaces with a **GoPro Hero 12** for video/audio capture, **Movella DOT** sensors for motion tracking, and a **Masimo MightySat** for vital sign monitoring.
- The system captures motion data at 60Hz, vital signs at 1Hz, and 720p video with synchronized timestamps across all data streams for comprehensive documentation.
- NFC-tagged medical supplies enable automated resource tracking and documentation.

## SYSTEM OVERVIEW FOR ACME

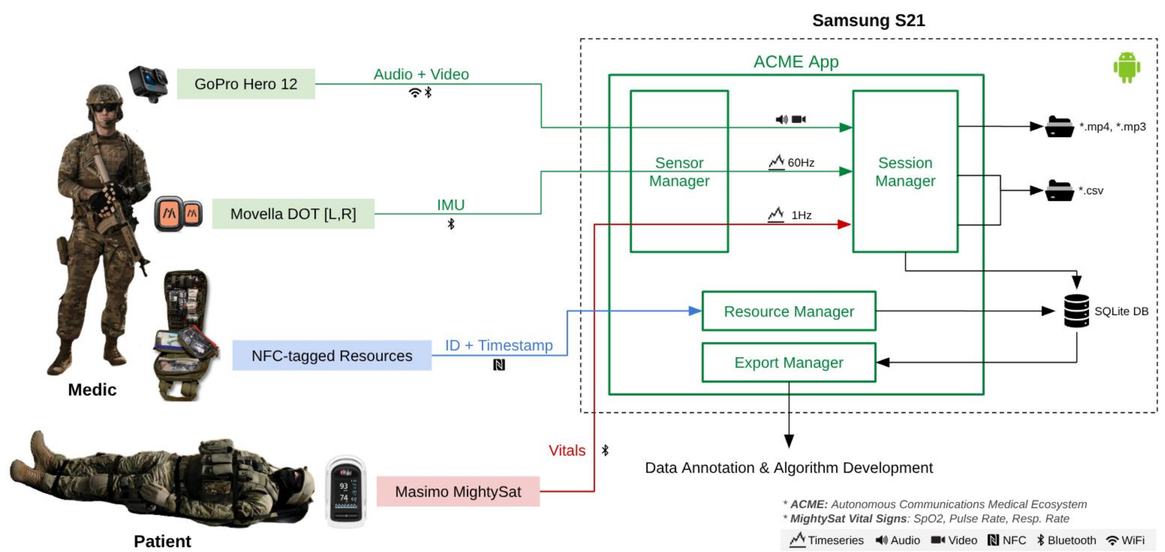


**System Architecture**

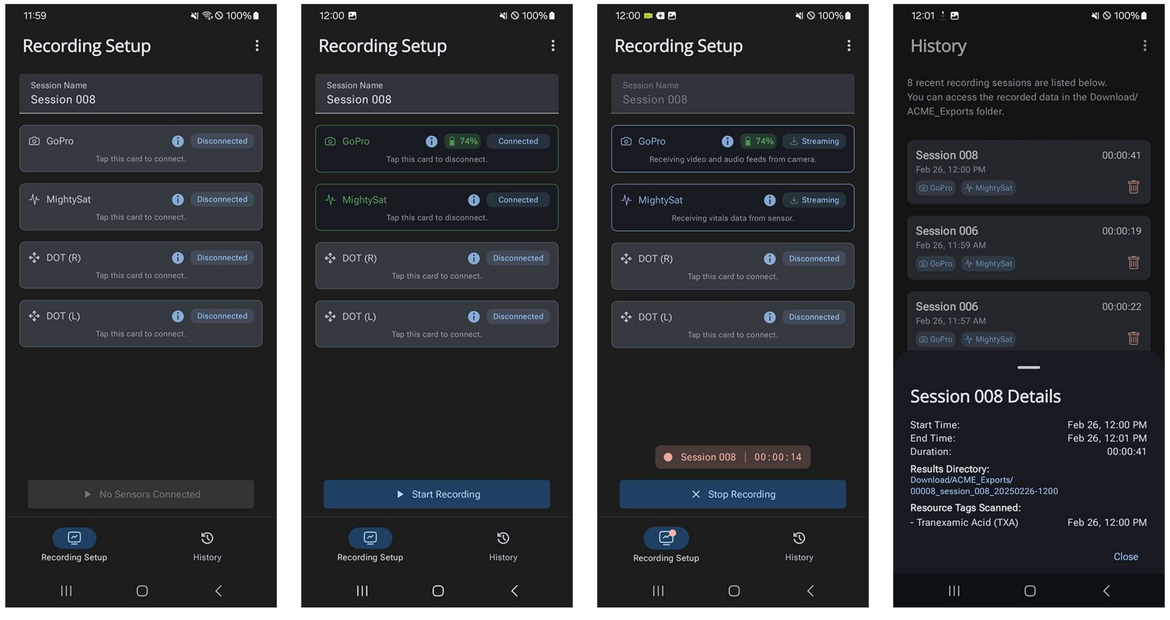


**User Interface**

## RESULTS

- Continuous data collection from all sensors was sustained for up to 2.5 hours,
- The duration of data collection was limited by the battery capacity of the GoPro.
- All data streams remained synchronized with the application clock without manual intervention.
- External evaluation by the U.S. Army's Telemedicine and Advanced Technology Research Center (TATRC) has deployed the platform in over 100 high-fidelity prehospital simulations to generate datasets for algorithm development.
- Formal performance metrics from this evaluation are pending.

## CONCLUSIONS

- ACME demonstrates engineering feasibility for passive multimodal data capture.
- It provides a foundation for autonomous data collection and documentation pipelines.
- Next steps: real-time algorithm integration, real-world testing.

## ACKNOWLEDGEMENTS

This work was supported by the Assistant Secretary of Defense for Health Affairs, through the Defense Medical Research and Development Program / Joint Program Committee 6 / Combat Casualty Care Research Program / Precision Trauma Care Research Award under Other Transactions Number HT9425-24-9-0027. The views and conclusions contained herein are those of the authors and should not be interpreted as necessarily representing the official policies or endorsements, either expressed or implied, of the U.S. Government.

MAC-SOS September 16-17, 2025 Pittsburgh

Contact: Tony K. Okeke, (646) 659-4319