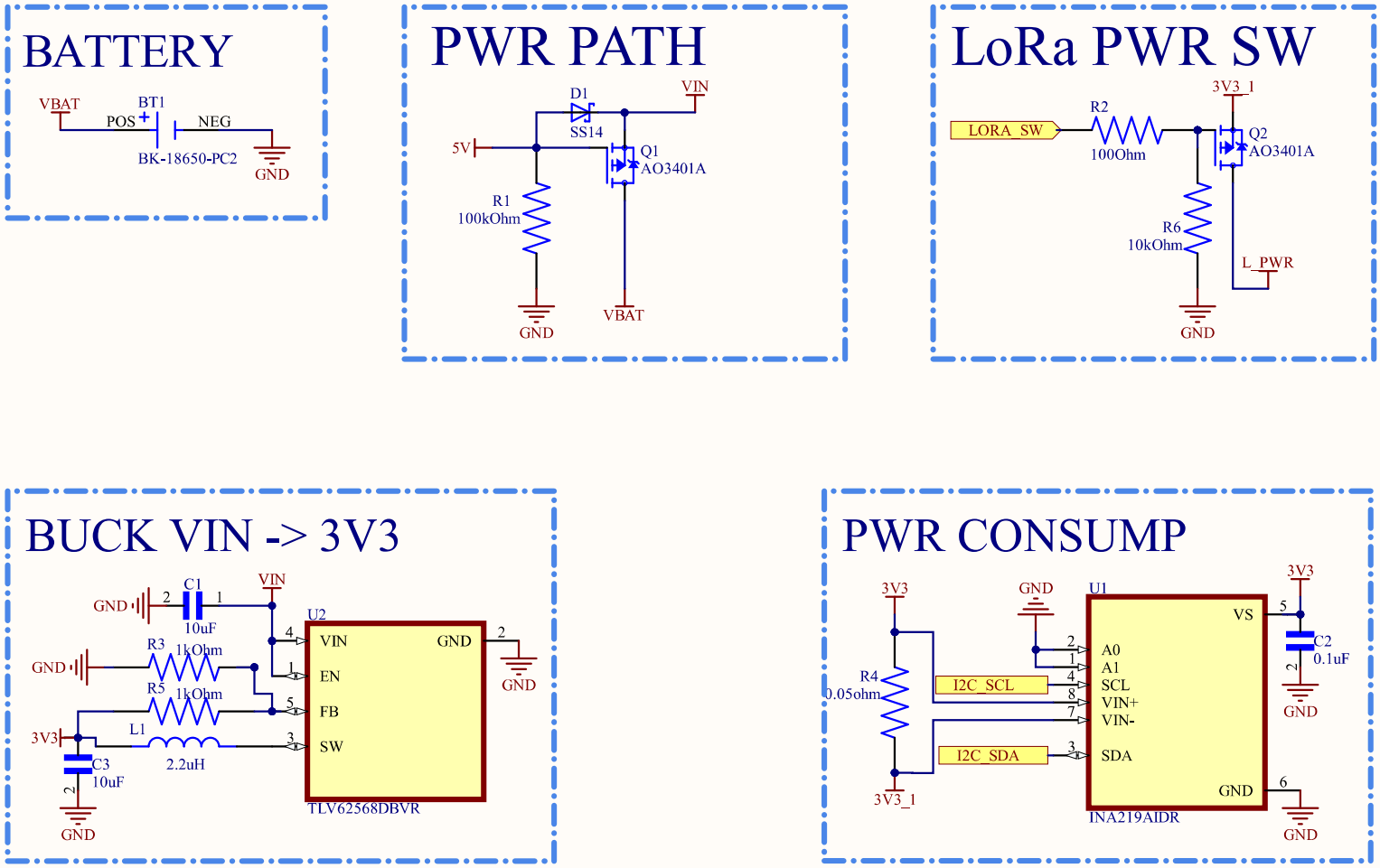

Title		
Size A4	Number	Revision
Date: 1.06.2026		Sheet of
File: C:\Users\..\Power.SchDoc		Drawn By:

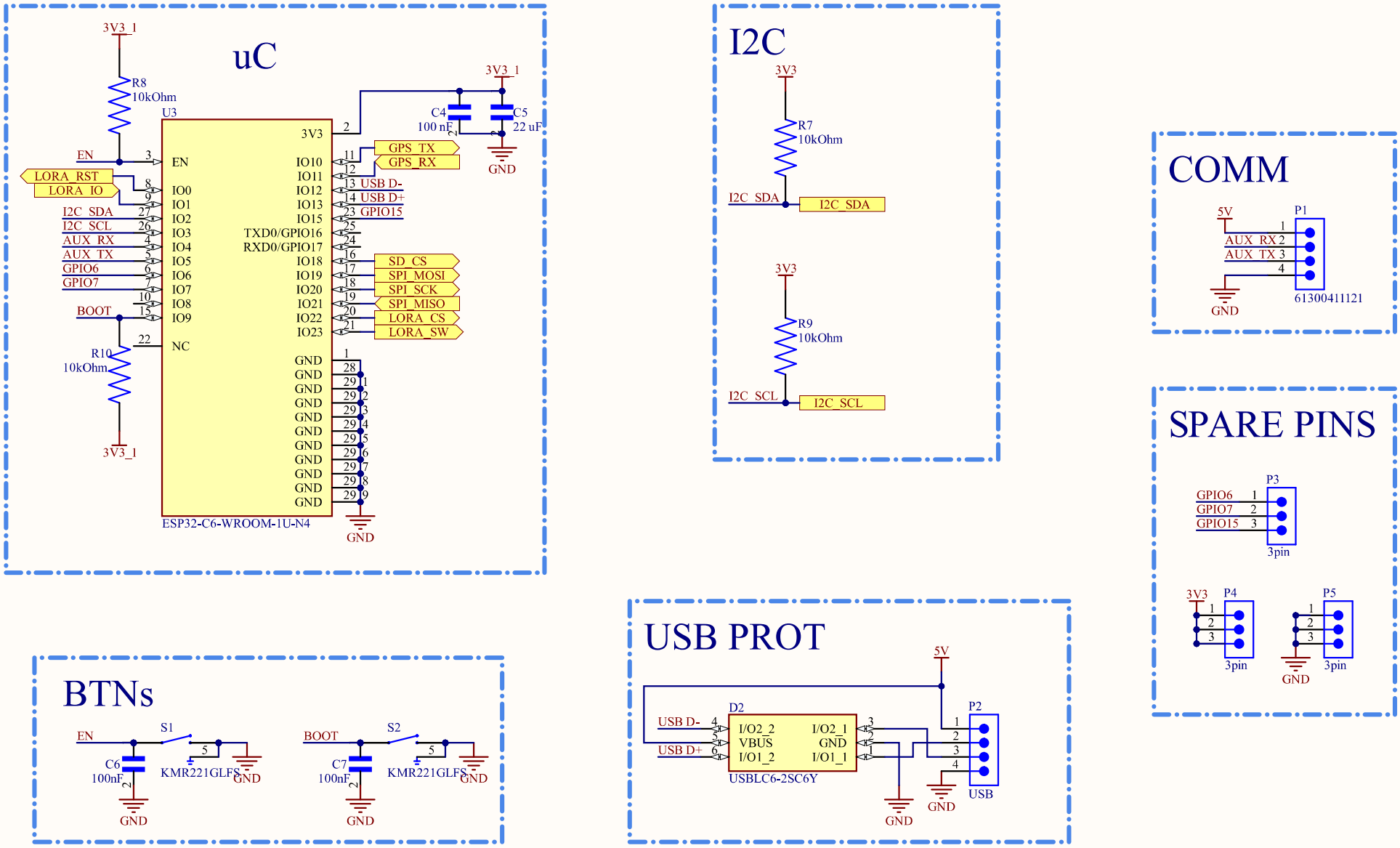

Title		
Size A4	Number	Revision
Date: 1.06.2026		Sheet of
File: C:\Users\..\Microcontroler.SchDoc		Drawn By:

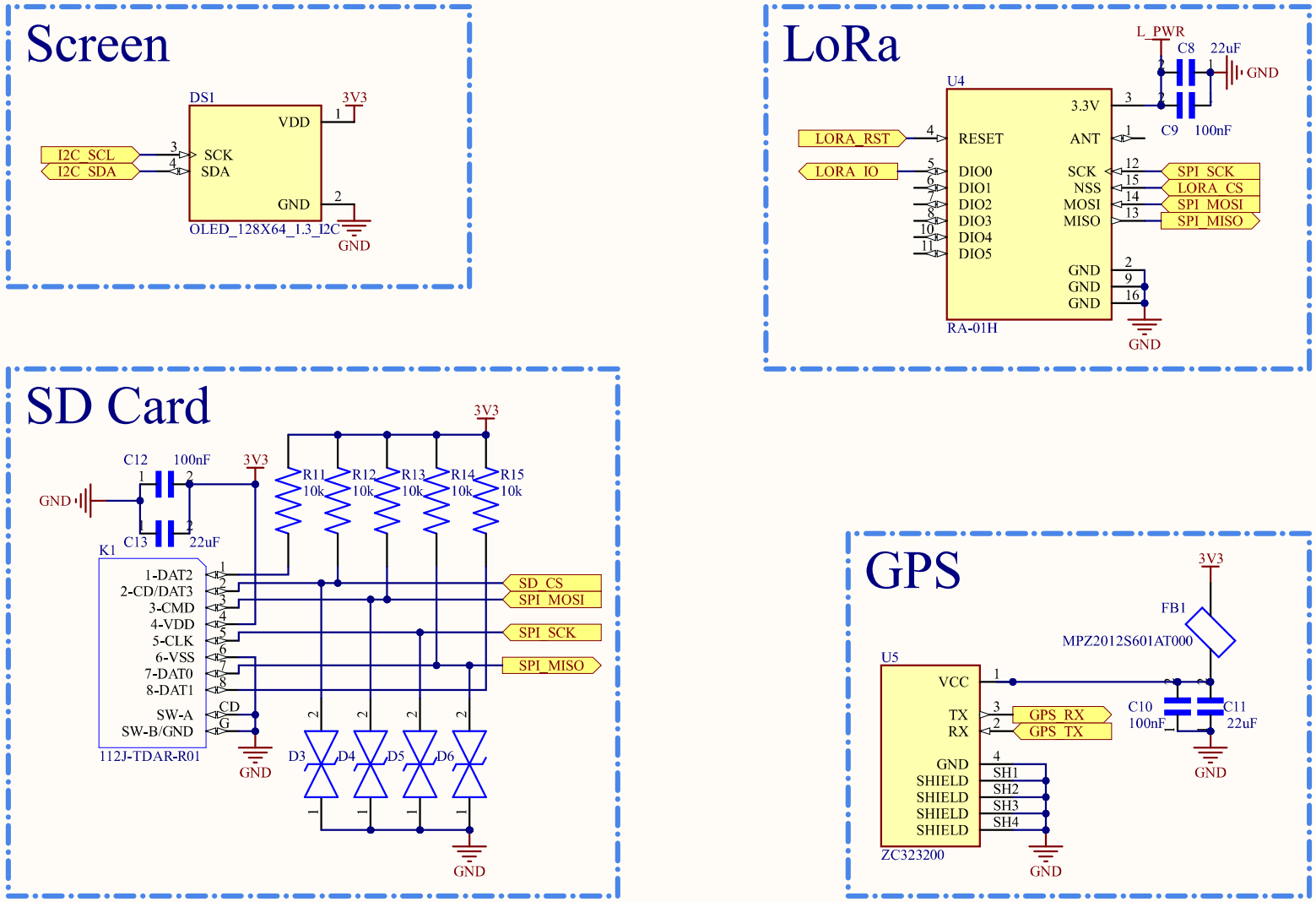

Title		
Size A4	Number	Revision
Date: 1.06.2026		Sheet of
File: C:\Users\..\Peripherals.SchDoc		Drawn By: