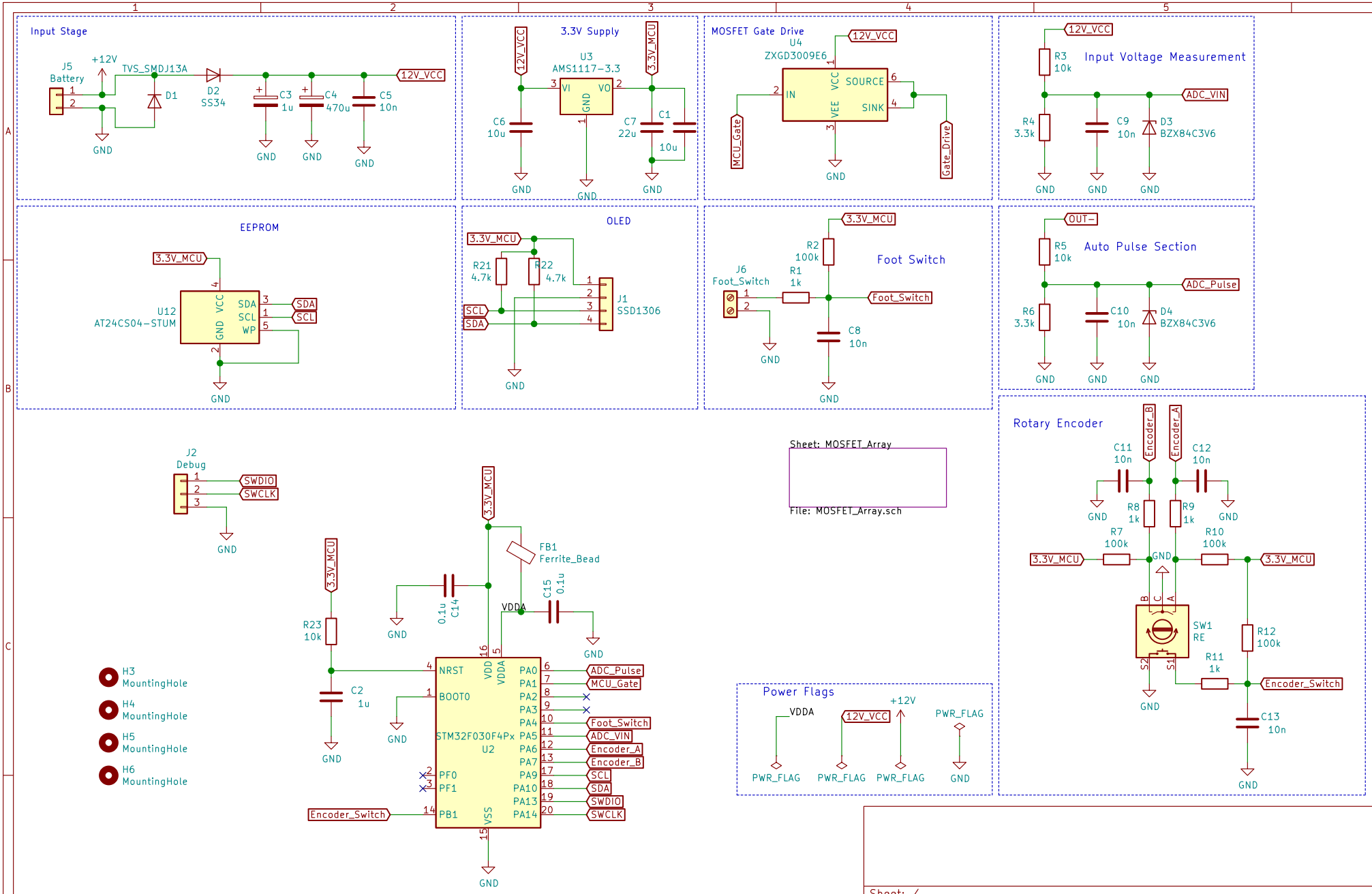


Sheet: /
File: Spot_Welder.sch

**Title:**

| Size: A4 | Date: | Rev: |
|---|---|---|
| KiCad E.D.A. kicad 5.99.0-unknown-281d77f100ubuntu18.04.1 | | Id: 1/2 |

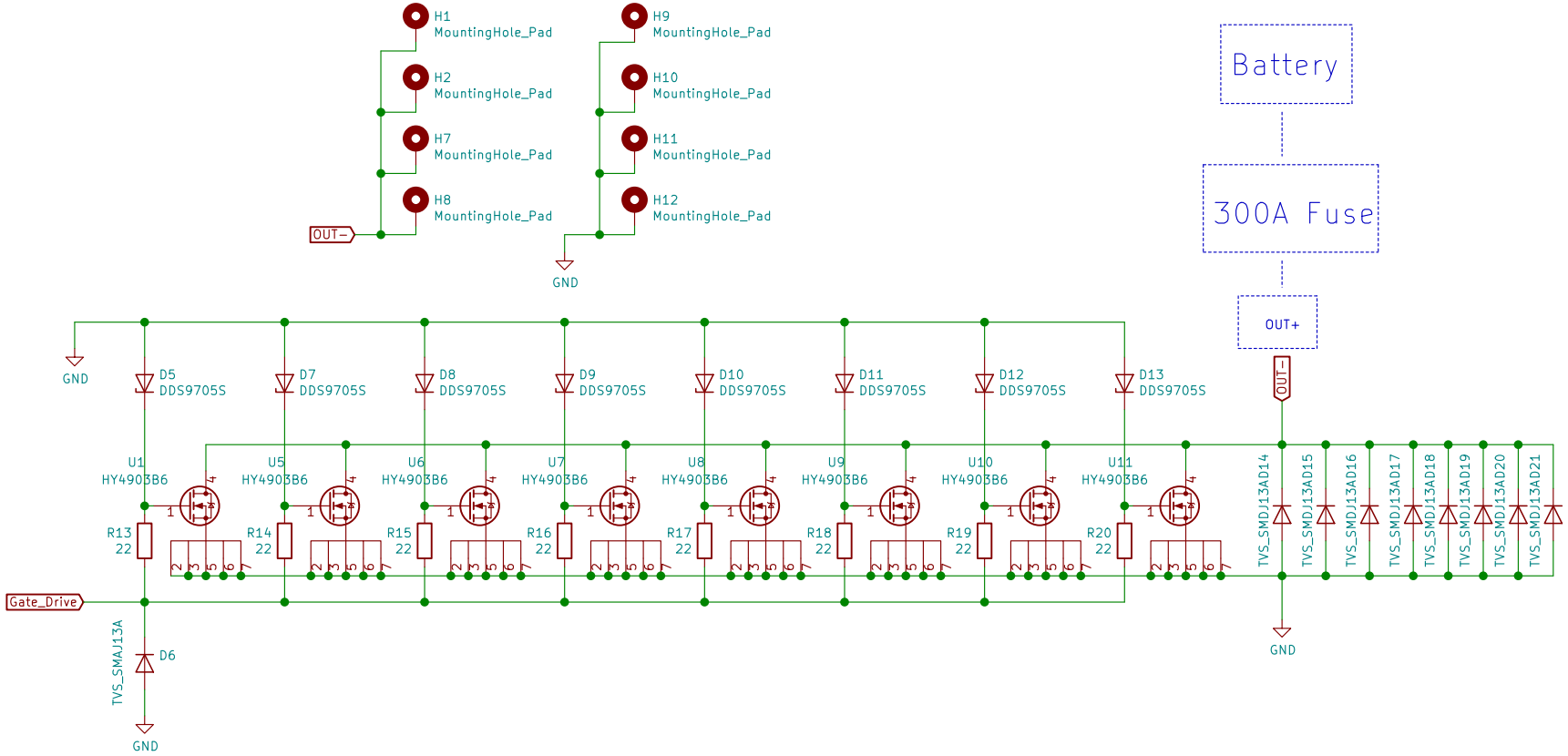


Sheet: /MOSFET_Array/
File: MOSFET_Array.sch

**Title:**

| Size: A4 | Date: | **Rev:** |
|---|---|---|
| KiCad E.D.A. kicad 5.99.0-unknown-281d77f100ubuntu18.04.1 | | Id: 2/2 |