# Bluetooth Speaker DSP System Block Diagram

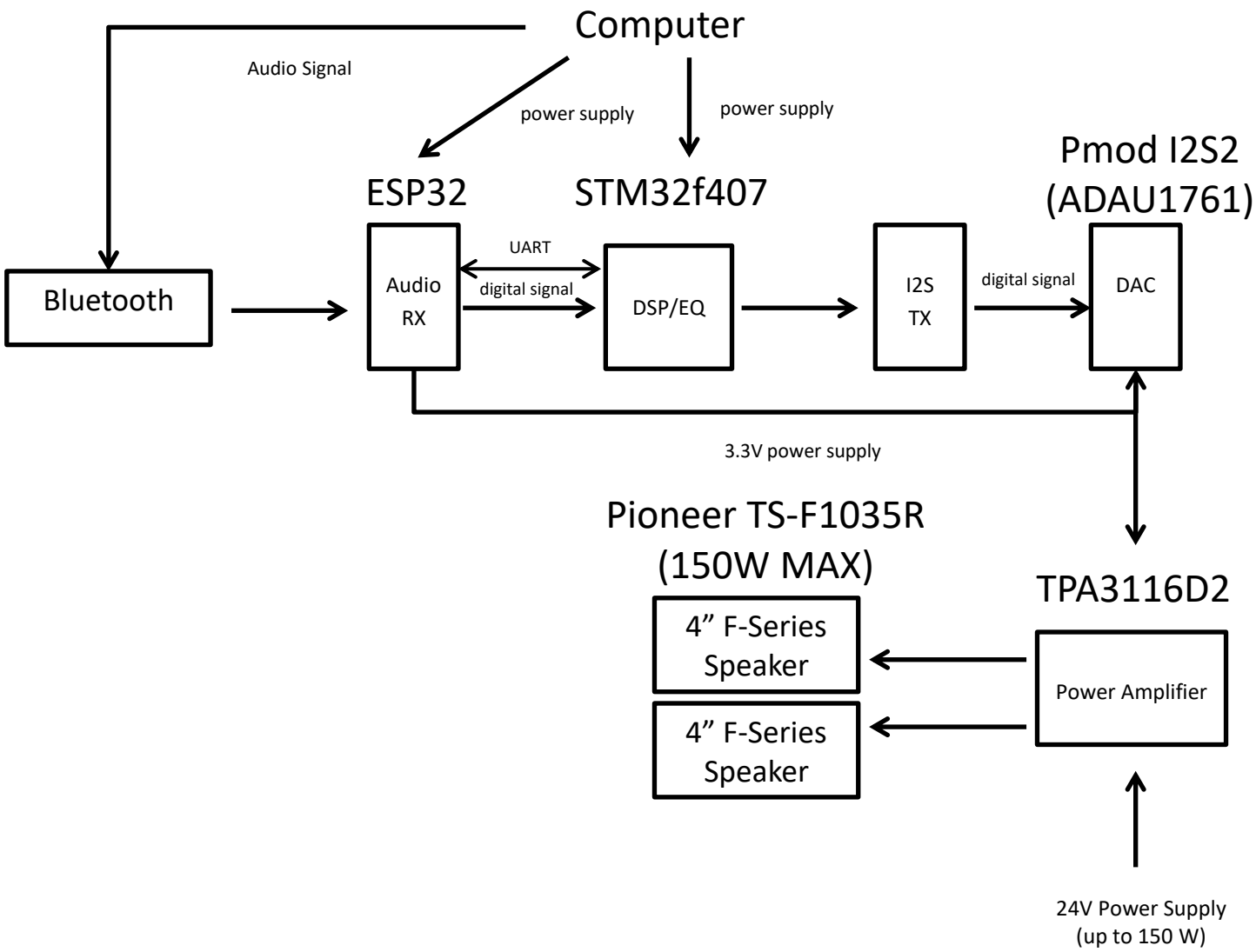

# Clock Set between boards

## I2S connection

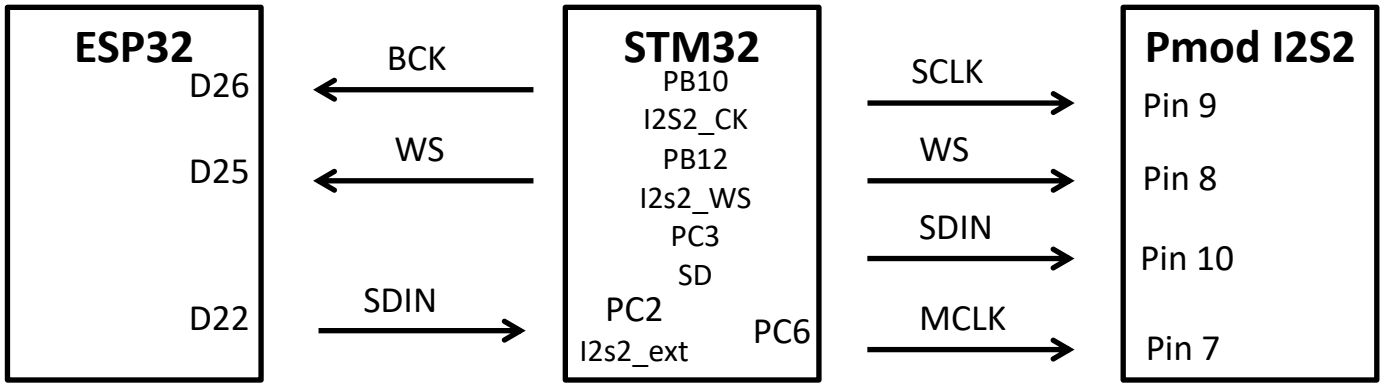


## UART connection

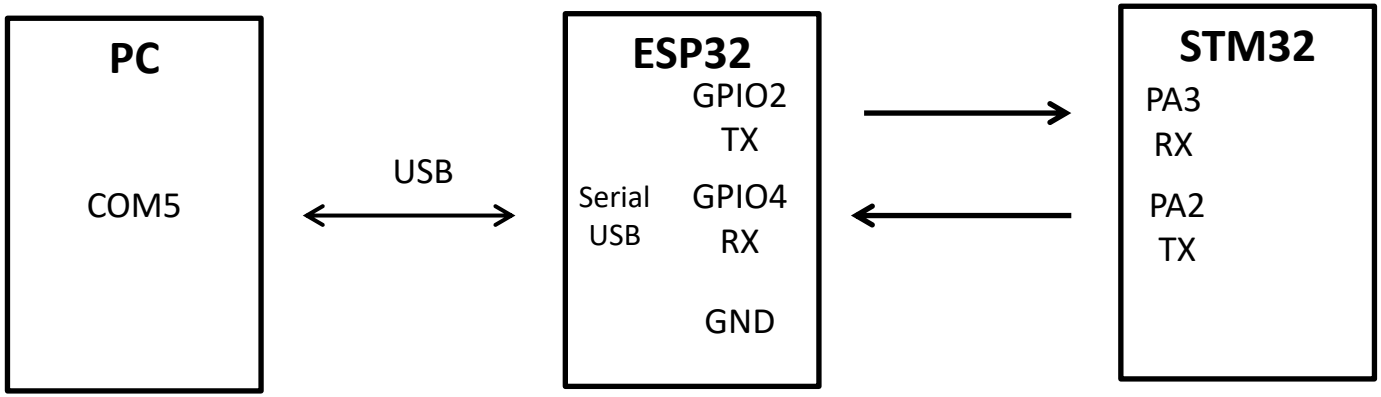


$$WS = 44.1\text{k}Hz$$

$$SCLK = 44.1\text{k} * 2 * 32 = 2.82MHz$$

$$MCLK = 44.1\text{k} * 256 = 11.3MHz$$