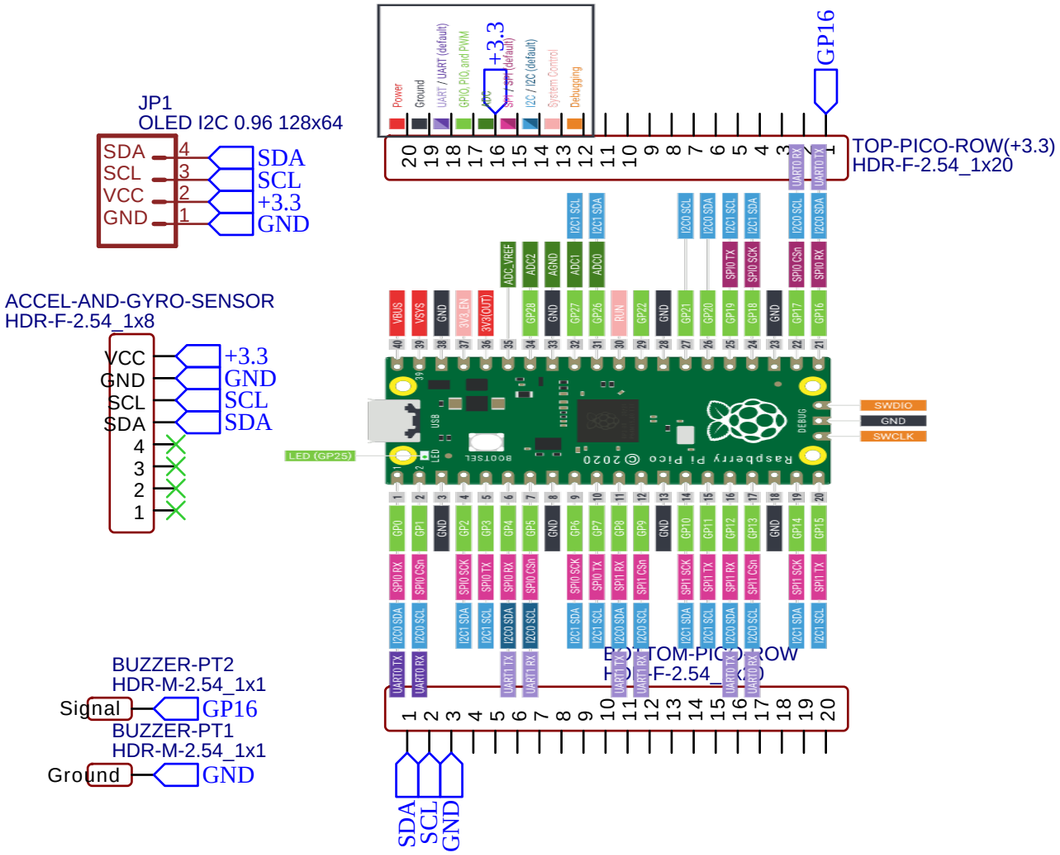

TITLE: Bin -> Onboard Jam!

REV: 1.0

Company: Hack Club!

Sheet: 1/1

Date: 2024-06-06

Drawn By: Evan