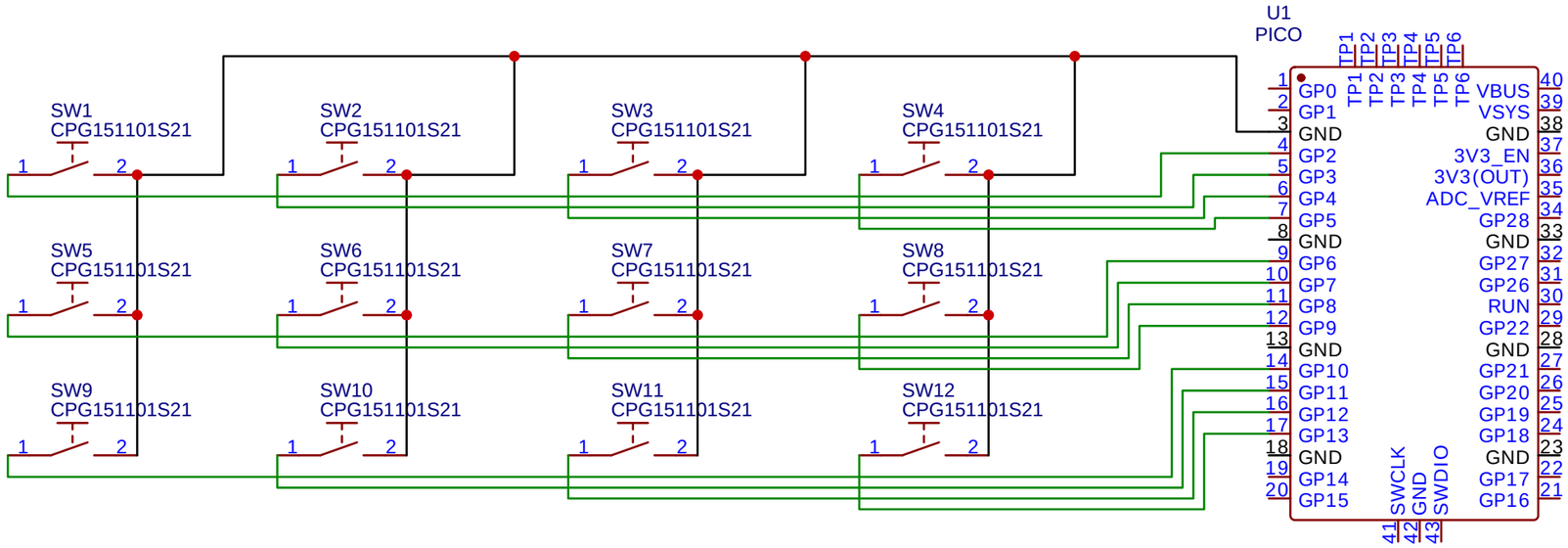

TITLE: Peter's Macropad		REV: 1.0
EasyEDA	Company: N/A	Sheet: 1/1
	Date: 2024-06-02 Drawn By: Peter Crossen	