OSP Project 2

M143010027 Kaiden Hsu

(I) RV32I 5-Stage Pipelined Cached Processor

5-Stage Pipelined Processor

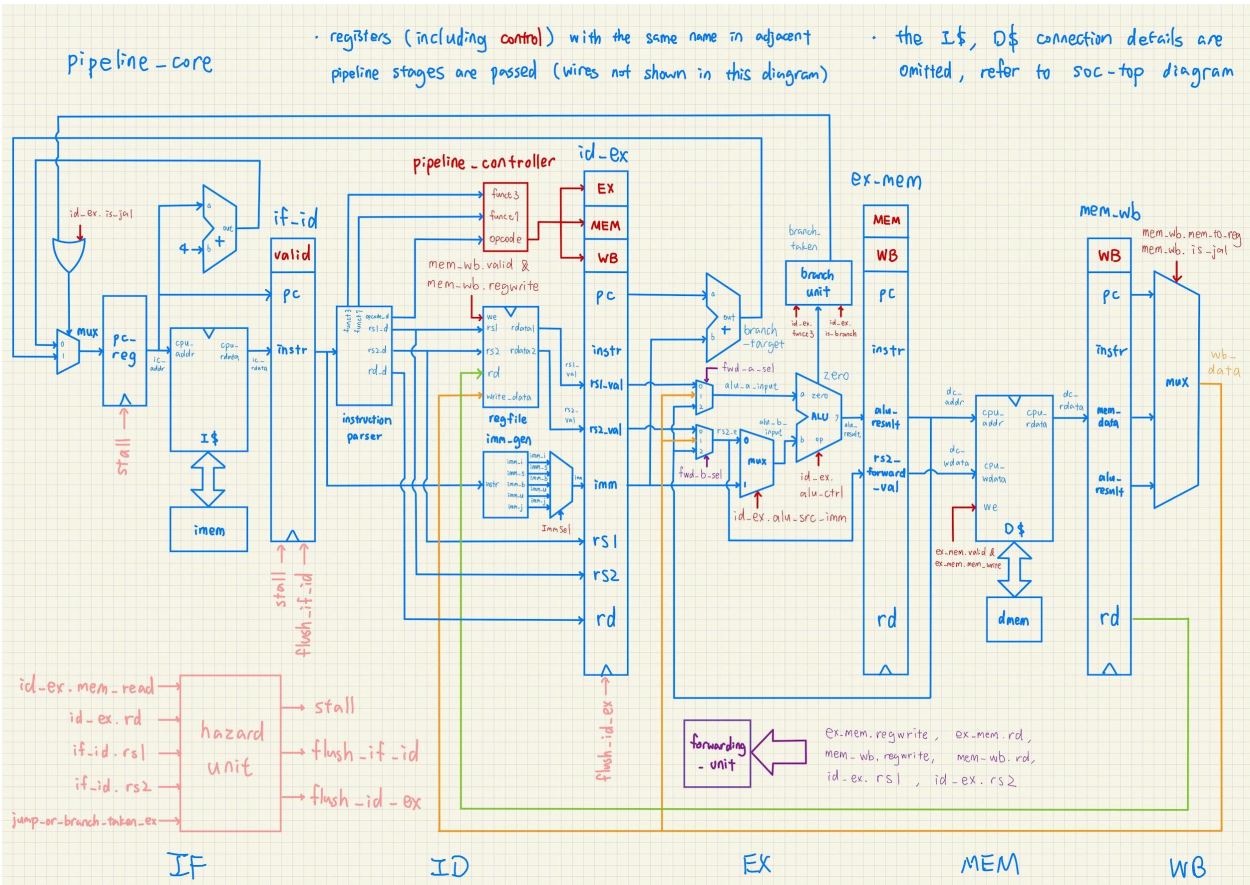

▲ 5-Stage Pipelined Processor Block Diagram

Instruction Type	Instructions
R-type	add, sub
I-type	addi, lw
S-type	sw
B-type	beq, bne

Instruction Type	Instructions
J-type	jal
other	halt sentinel

Cache Subsystem

- cache policy: direct-mapped, write back, read/write-allocate
- capacity = 4 lines, cache line size = 4 words/line
- the DRAM rdata, wdata ports are widened to 128 bits (cache line size) for ease of implementation (so the cache controller does not have to keep track of the memory's delay), which may cause routing trouble in real SoC design.

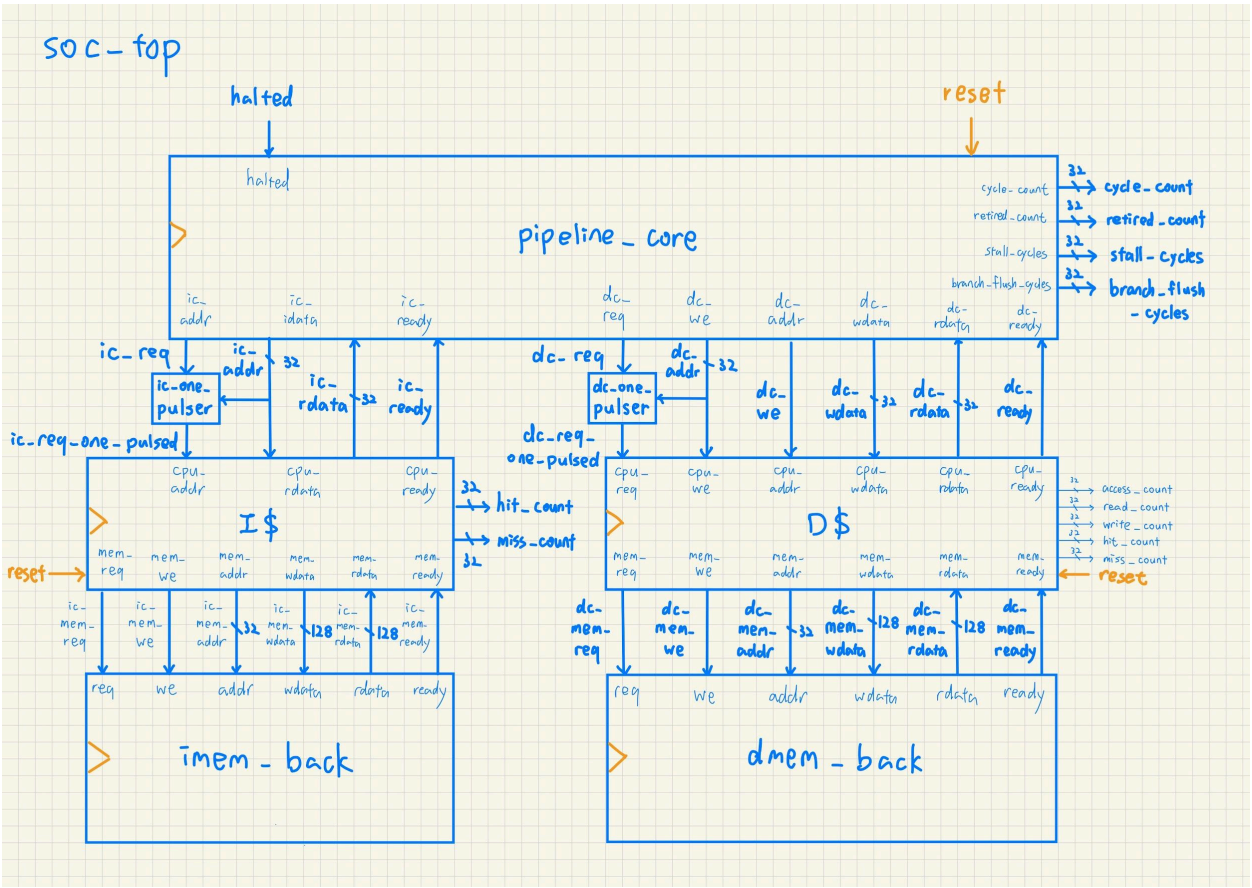

▲ Cache Subsystem Block Diagram

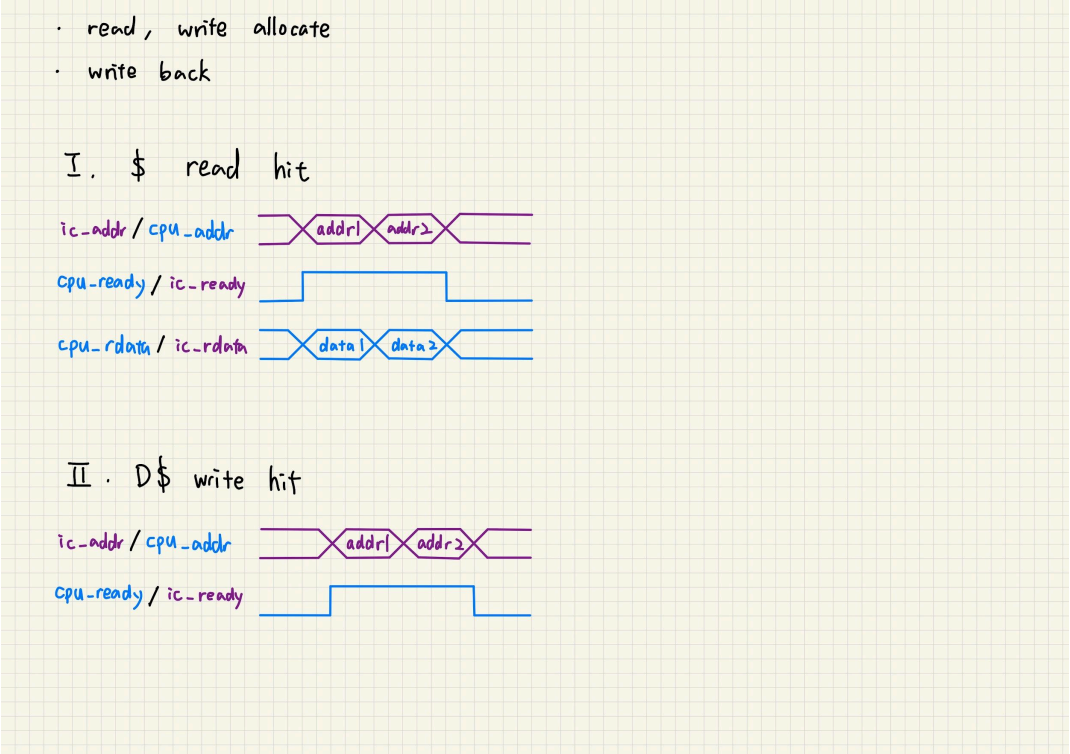

▲ Cache Hit Timing Diagram

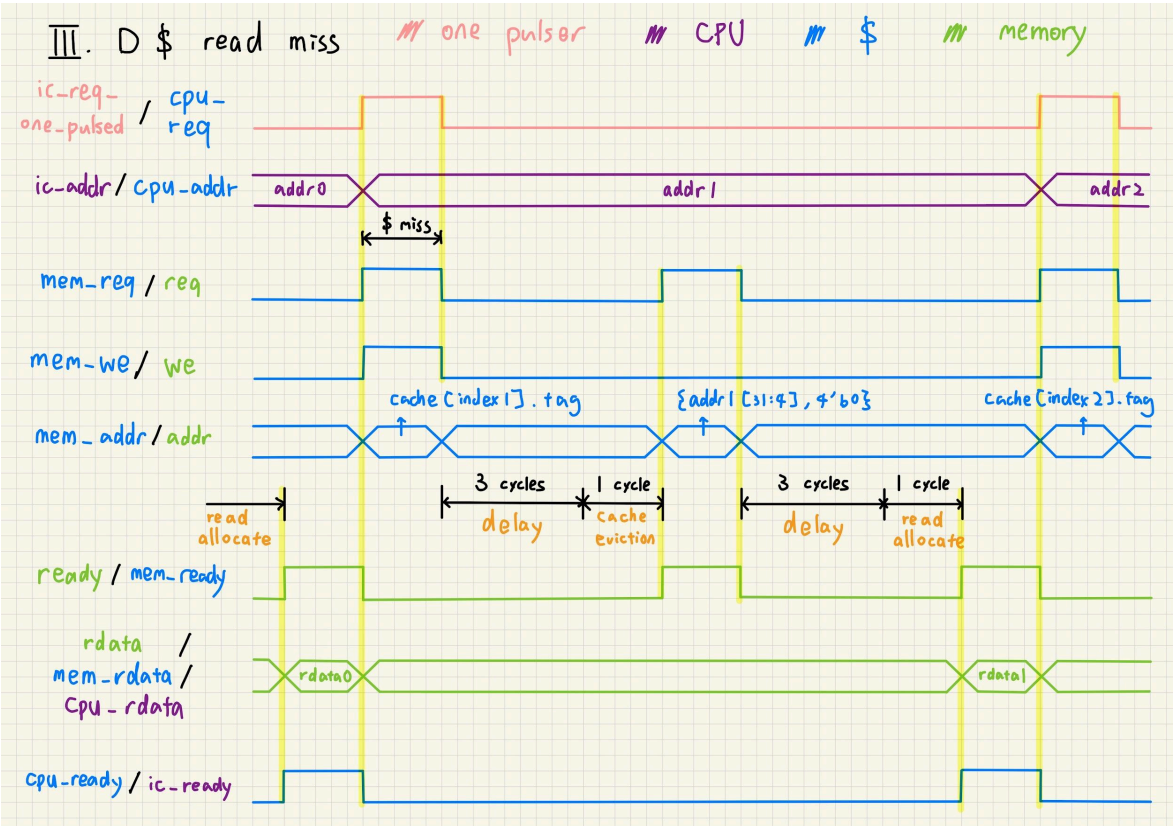

▲ D-Cache Read Miss Timing Diagram

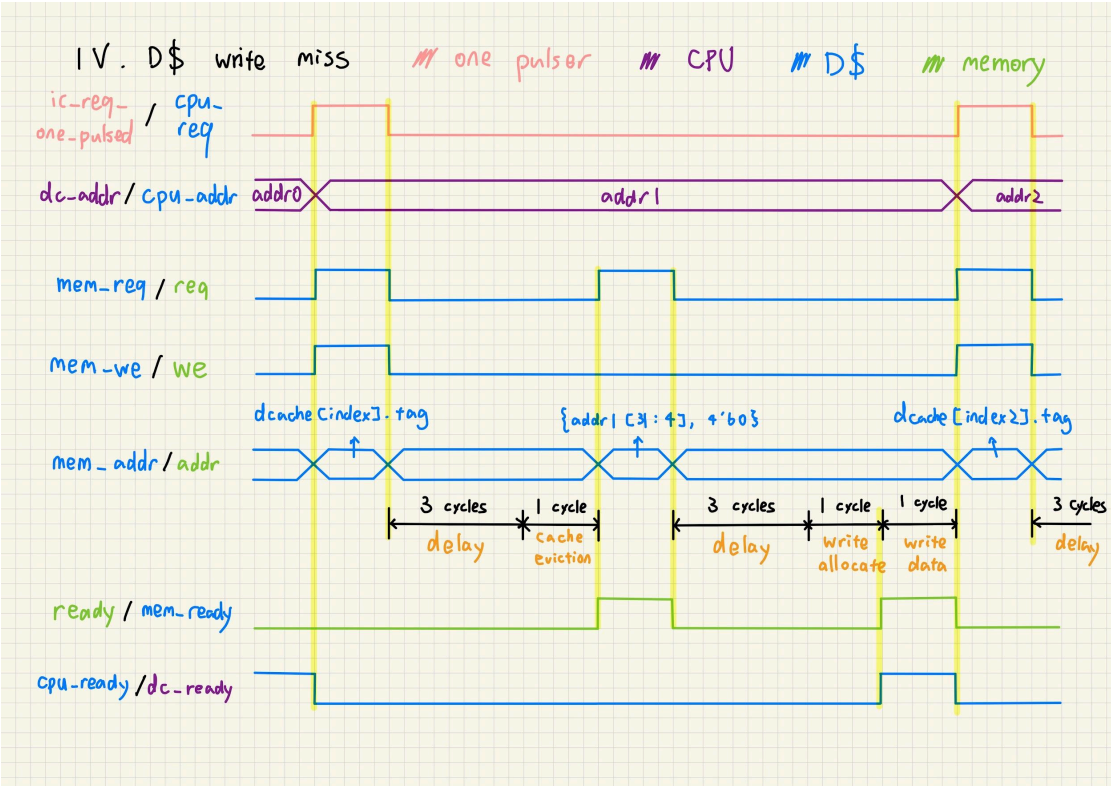

▲ D-Cache Write Miss Timing Diagram

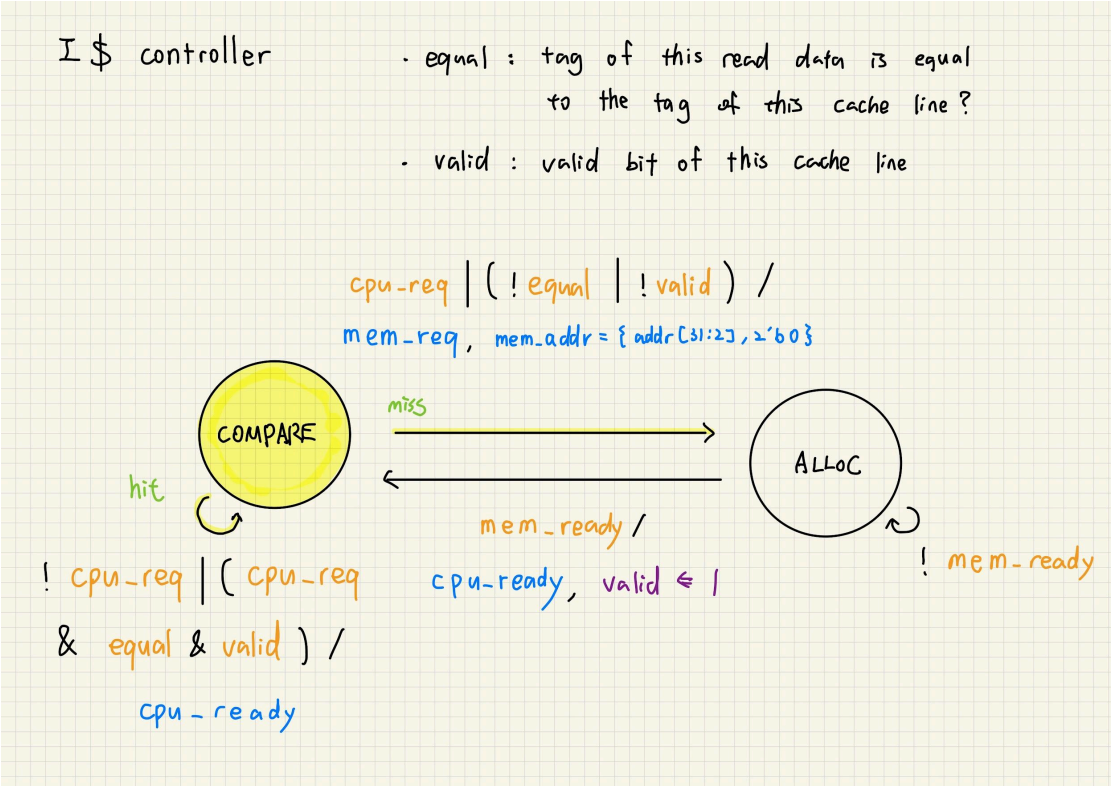

▲ I-Cache controller Design

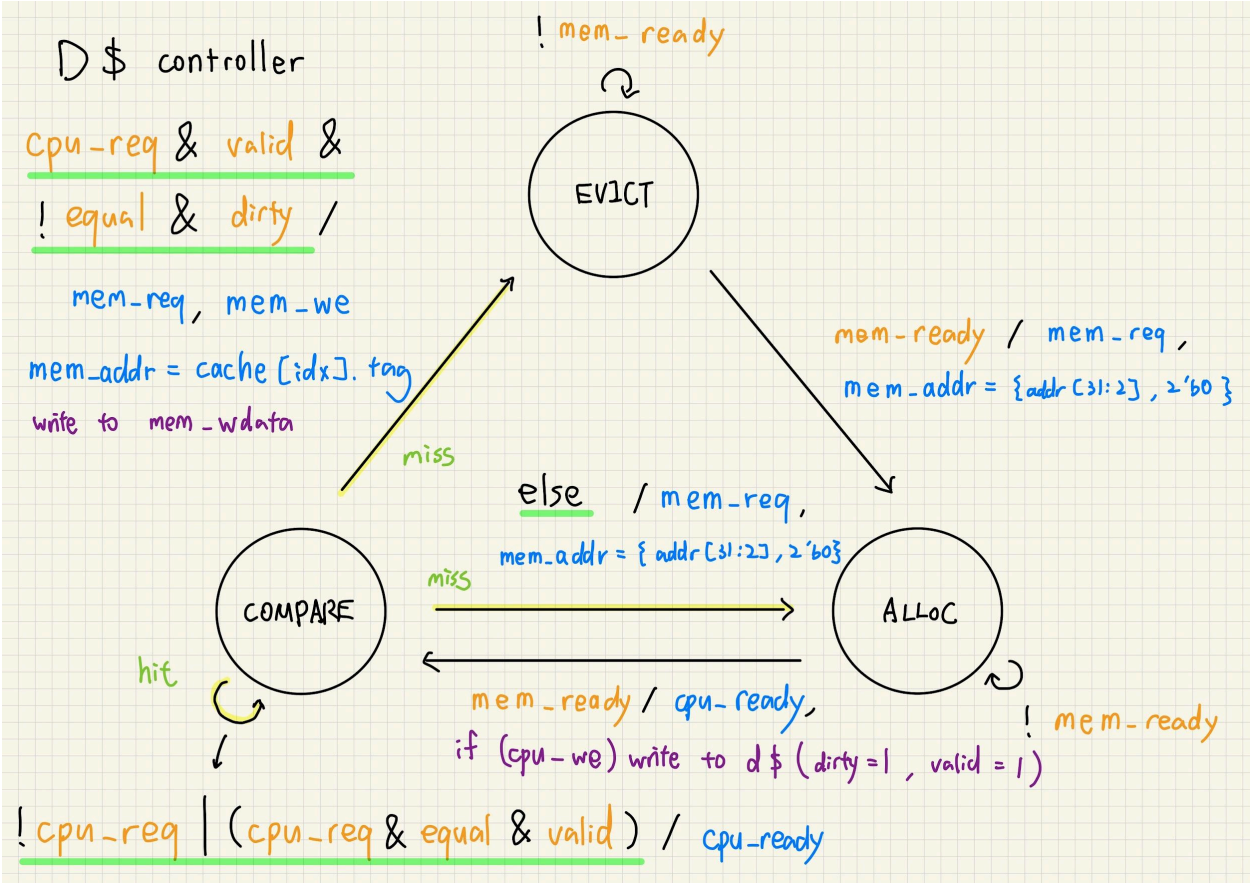

▲ D-Cache controller Design

Usage

```
$ ./run.sh
```

(cycle count)	no $	only I$	I$ + D$
no-haz	54	24	24
forwarding	54	24	24
branch-taken	54	24	24
temporal	59	29	29
conflict	80	45	35

(II) Histogram Workload Profiling

```
$ ./run_examples.sh
```

Metric	Baseline Value	Optimized Value	Improvement
simInsts	214819	176572	17.80%
system.cpu.numCycles	289185	233316	19.33%
system.cpu.cpi	1.346180	1.321365	1.84%
system.cpu.ipc	0.742843	0.756793	-1.88%
system.cpu.commitStats0.cpi	1.346180	1.321365	1.84%
system.cpu.commitStats0.ipc	0.742843	0.756793	-1.88%

- The baseline program is branch-heavy since the CPU has to evaluate a maximum of 15 conditional branches to figure out which bin to increment
- The memory behavior is improved because
    - the ***local_bins[]*** array is local in the optimized version, upon which the compiler may make aggressive optimization (***-O2***)
    - Less branchy program may increase I-cache miss => better instruction spatial locality
    - For the **baseline program**, **branch handling** matters more, though I'm not sure if branch prediction helps with this kind of random selection situation. For the **optimized version**, **cache configuration** matters more as branching factor is eliminated and data movement matters more than computation.