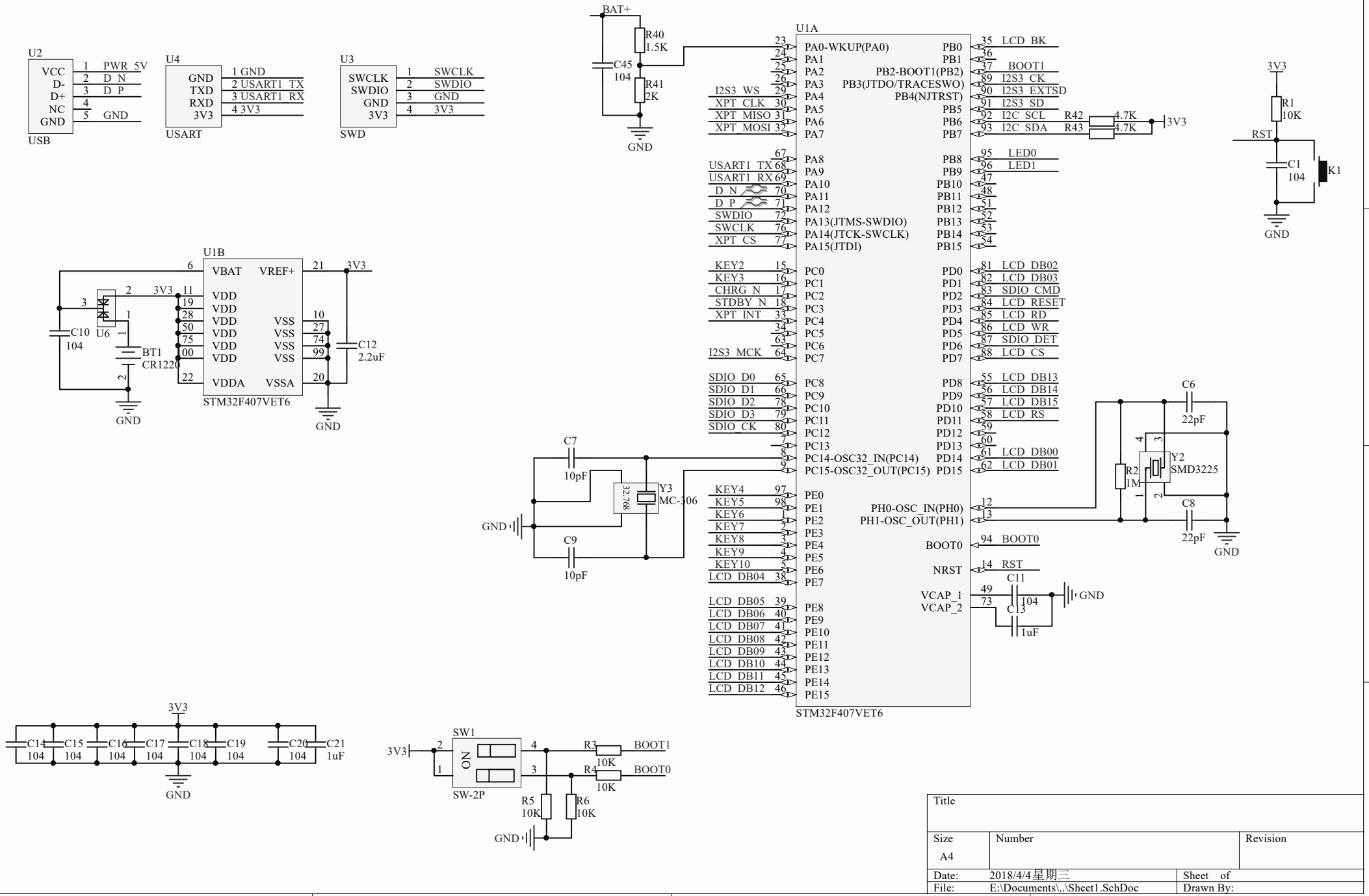
U2
VCC 1 PWR_5V
D- 2 D_N
D+ 3 D_P
NC 4
GND 5 GND
USB
U4
GND 1 GND
TXD 2 USART1_TX
RXD 3 USART1_RX
3V3 4 3V3
USART
U3
SWCLK 1 SWCLK
SWDIO 2 SWDIO
GND 3 GND
3V3 4 3V3
SWD
BAT+
R40 1.5K
C45 104
R41 2K
GND
U1A
PA0-WKUP(PA0) 23
PA1 24
PA2 25
PA3 26
PA4 29 I2S3_WS
PA5 30 XPT_CLK
PA6 31 XPT_MISO
PA7 32 XPT_MOSI
PA8 67
PA9 68 USART1_TX
PA10 69 USART1_RX
PA11 70 D_N
PA12 71 D_P
PA13(JTMS-SWDIO) 72 SWDIO
PA14(JTCK-SWCLK) 76 SWCLK
PA15(JTDI) 77 XPT_CS
PC0 15 KEY2
PC1 16 KEY3
PC2 17 CHRG_N
PC3 18 STDBY_N
PC4 33 XPT_INT
PC5 34
PC6 63
PC7 64 I2S3_MCK
PC8 65 SDIO_D0
PC9 66 SDIO_D1
PC10 78 SDIO_D2
PC11 79 SDIO_D3
PC12 80 SDIO_CK
PC13 7
PC14-OSC32_IN(PC14) 8
PC15-OSC32_OUT(PC15) 9
PE0 97 KEY4
PE1 98 KEY5
PE2 1 KEY6
PE3 2 KEY7
PE4 3 KEY8
PE5 4 KEY9
PE6 5 KEY10
PE7 38 LCD_DB04
PE8 39 LCD_DB05
PE9 40 LCD_DB06
PE10 41 LCD_DB07
PE11 42 LCD_DB08
PE12 43 LCD_DB09
PE13 44 LCD_DB10
PE14 45 LCD_DB11
PE15 46 LCD_DB12
PB0 35 LCD_BK
PB1 36
PB2-BOOT1(PB2) 37 BOOT1
PB3(JTDO/TRACESWO) 89 I2S3_CK
PB4(NJTRST) 90 I2S3_EXTSD
PB5 91 I2S3_SD
PB6 92 I2C_SCL
PB7 93 I2C_SDA
PB8 95 LED0
PB9 96 LED1
PB10 47
PB11 48
PB12 51
PB13 52
PB14 53
PB15 54
PD0 81 LCD_DB02
PD1 82 LCD_DB03
PD2 83 SDIO_CMD
PD3 84 LCD_RESET
PD4 85 LCD_RD
PD5 86 LCD_WR
PD6 87 SDIO_DET
PD7 88 LCD_CS
PD8 55 LCD_DB13
PD9 56 LCD_DB14
PD10 57 LCD_DB15
PD11 58 LCD_RS
PD12 59
PD13 60
PD14 61 LCD_DB00
PD15 62 LCD_DB01
PH0-OSC_IN(PH0) 12
PH1-OSC_OUT(PH1) 13
BOOT0 94 BOOT0
NRST 14 RST
VCAP_1 49
VCAP_2 73
STM32F407VET6
R42 4.7K
R43 4.7K
3V3
3V3
R1 10K
RST
C1 104
K1
GND
U1B
VBAT 6
VREF+ 21
VDD 11 19 28 50 75 00
VSS 10 27 74 99
VDDA 22
VSSA 20
STM32F407VET6
3V3
C10 104
U6
BT1 CR1220
C12 2.2uF
GND
C7 10pF
C9 10pF
Y3 MC-306
32.768
GND
C6 22pF
C8 22pF
R2 1M
Y2 SMD3225
GND
C11 104
C13 1uF
GND
3V3
C14 104
C15 104
C16 104
C17 104
C18 104
C19 104
C20 104
C21 1uF
GND
SW1
ON
SW-2P
3V3
R3 10K
R4 10K
BOOT1
BOOT0
R5 10K
R6 10K
GND
Title
Size A4
Number
Revision
Date: 2018/4/4星期三
Sheet of
File: E:\Documents\..\Sheet1.SchDoc
Drawn By:

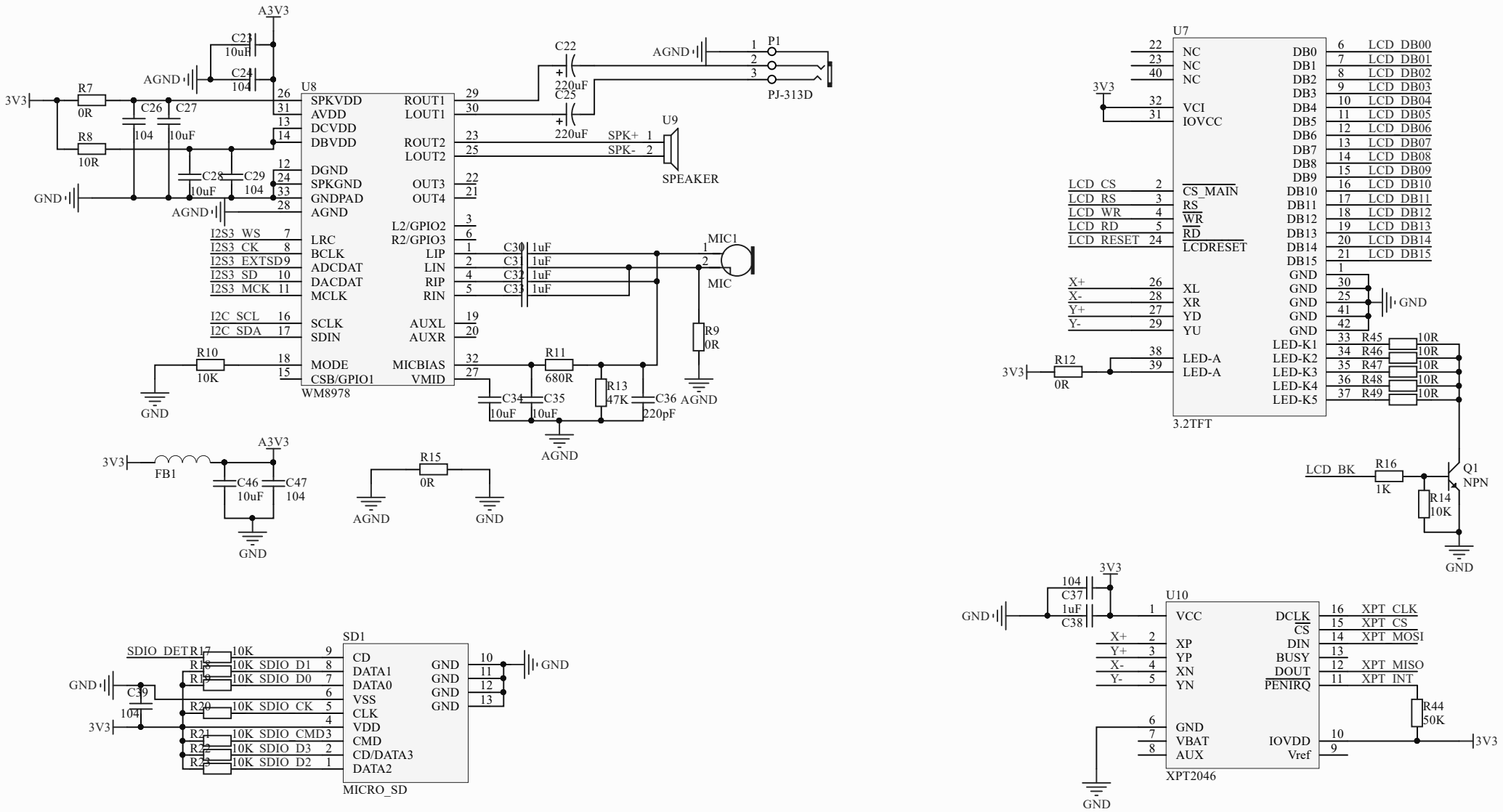

Title		
Size A4	Number	Revision
Date: 2018/4/4星期三		Sheet of
File: E:\Documents\..\Sheet2.SchDoc		Drawn By:

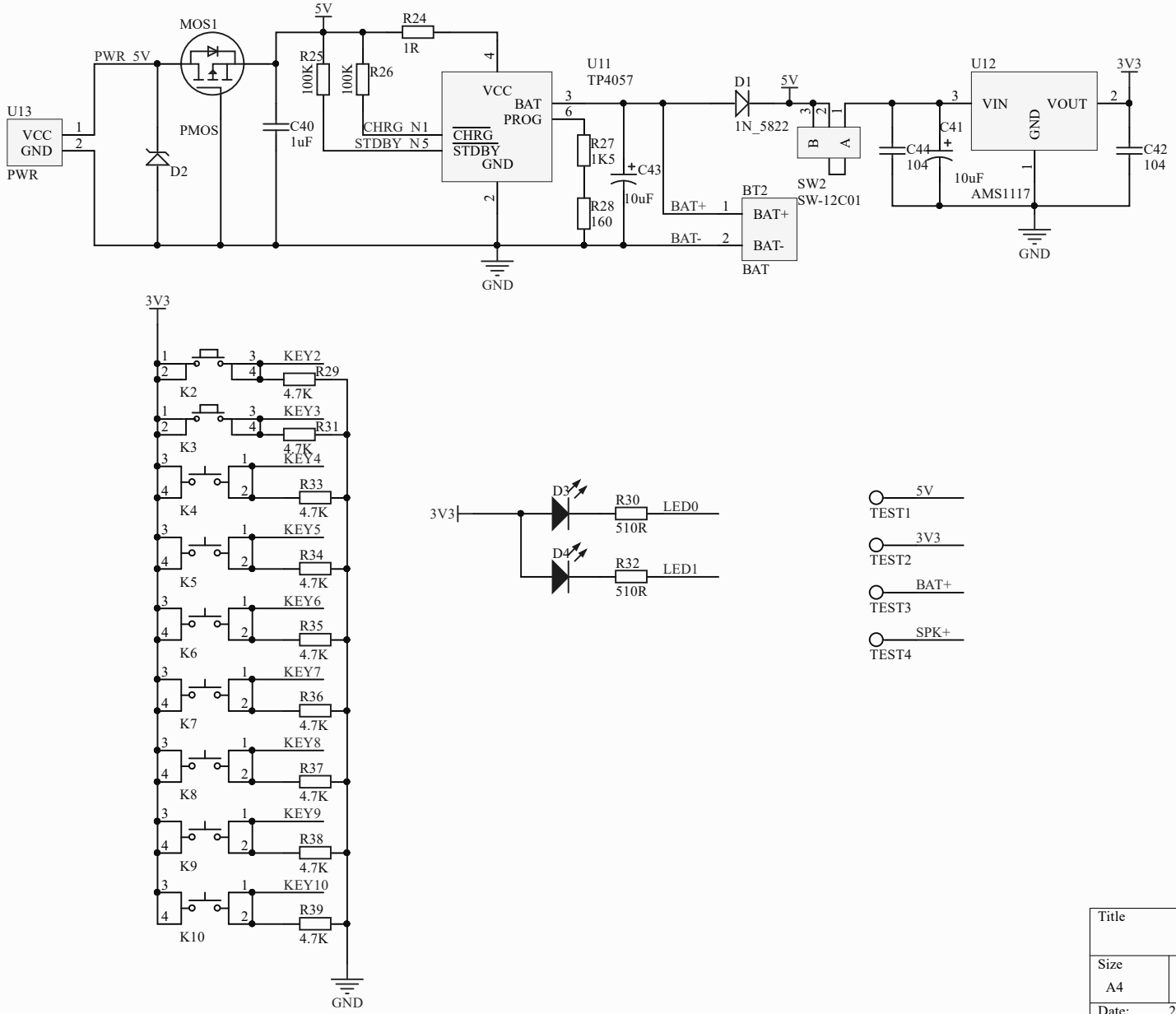

Title		
Size A4	Number	Revision
Date: 2018/4/4星期三		Sheet of
File: E:\Documents\..\Sheet3.SchDoc		Drawn By:

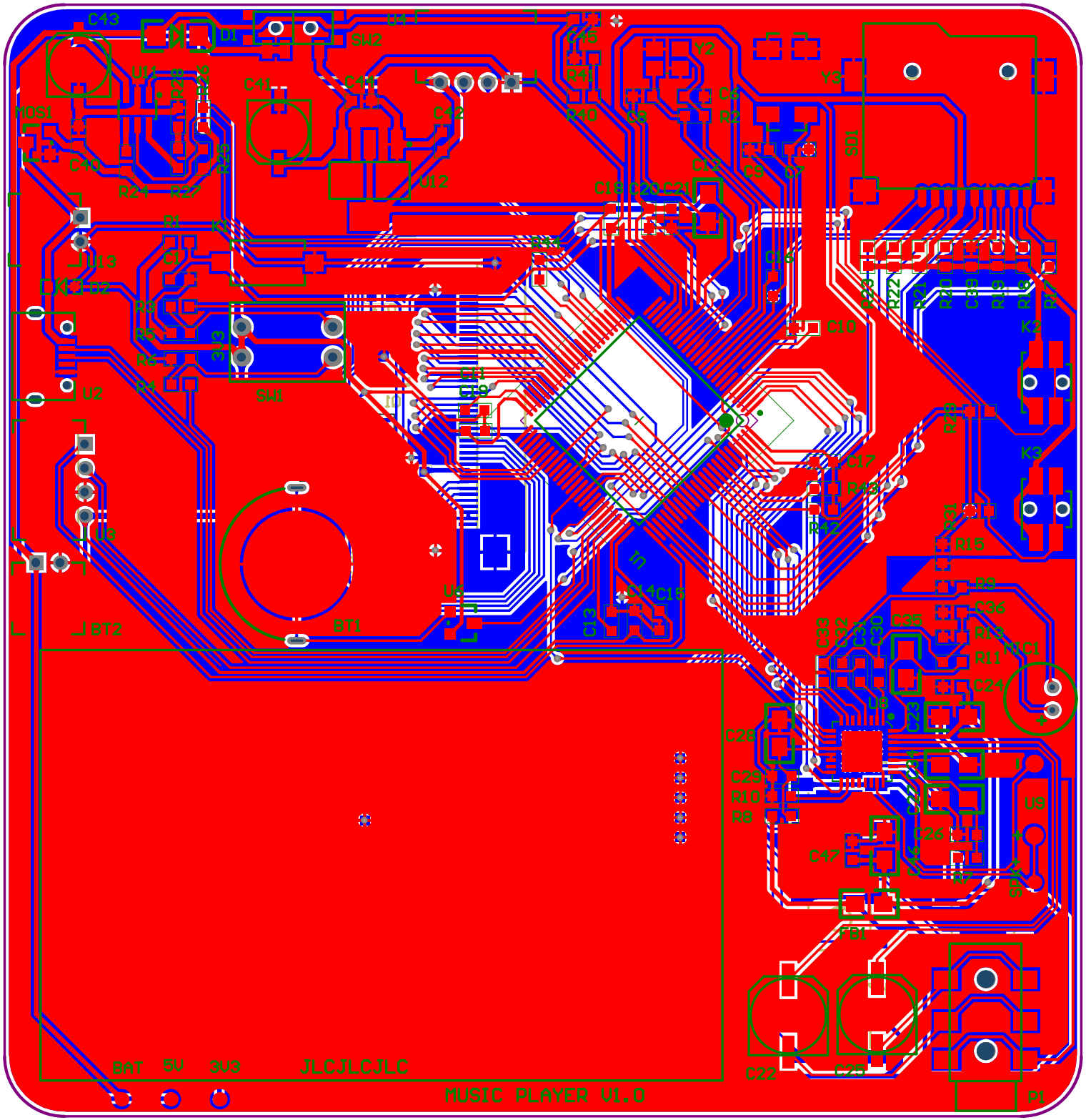
C43
D1
SW2
U4
C45
Y2
Y3
U1
C41
C44
C42
MOS1
C40
R24
R27
U12
C18
C20
C21
C19
C16
C10
K2
K3
U2
SW1
U3
BT2
BT1
U6
C14
C15
C17
R43
R42
R15
C36
R13
R11
MIC1
C35
C24
C28
C29
R10
R8
U9
C26
C47
FB1
C22
C25
P1
BAT
5V
3V3
JLCJLCJLC
MUSIC PLAYER V1.0