Lab Sheet 03

Title: Designing sequence and activity diagrams

Aims:

- To design sequence diagram and activity diagram in BOUML tool **Note:**

Synchronous Messages ⟶

- The sender **waits** for the receiver to process the message before continuing execution.
- The receiver must **complete the requested action and return control** before the sender can proceed.
- It is represented by a **solid line with a filled arrowhead**.

Asynchronous Messages ——>

- The sender **does not wait** for a response from the receiver.
- The sender continues its execution **immediately**, without waiting for the receiver to finish processing.
- It is represented by a **solid line with an open (stick) arrowhead**.

Return Message (Reply Message) - - - →

- Shows data or control returning from receiver to sender.
- Only used as a **reply to a synchronous call**, not for prompts or UI. User prompts are NOT return messages. Prompts are normal synchronous messages.
- It is represented by a **dashed line with an open (stick) arrowhead**.

Task 01: Design a Sequence Diagram

Consider a scenario where a ***user is withdrawing cash from an ATM***. The sequence starts with the ***user inserting their ATM card and entering their PIN***. The system ***verifies the PIN, checks the account balance, and prompts*** the ***user to select a withdrawal amount***. The ***ATM dispenses the cash and updates the account balance***. The ***sequence involves interactions between the user***, the ***ATM machine, the bank's database system***, and ***the cash dispenser***.

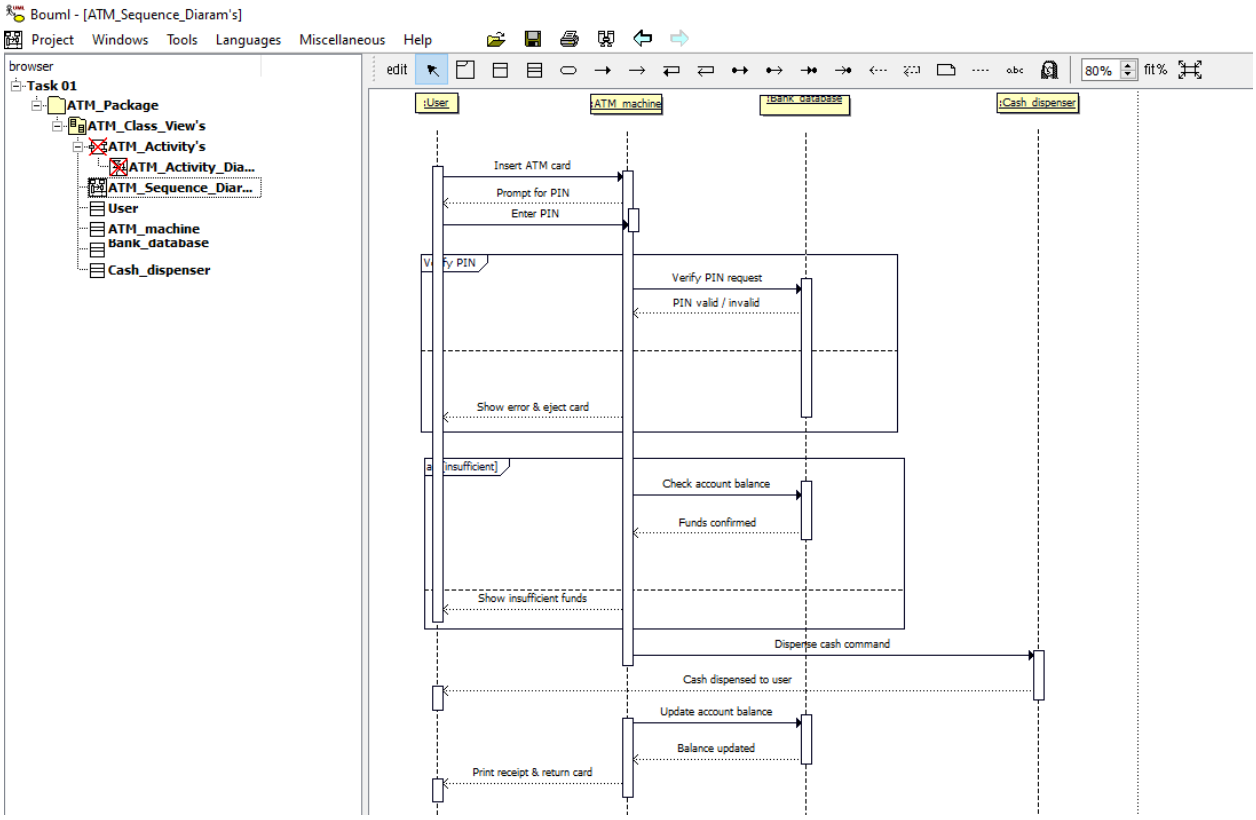

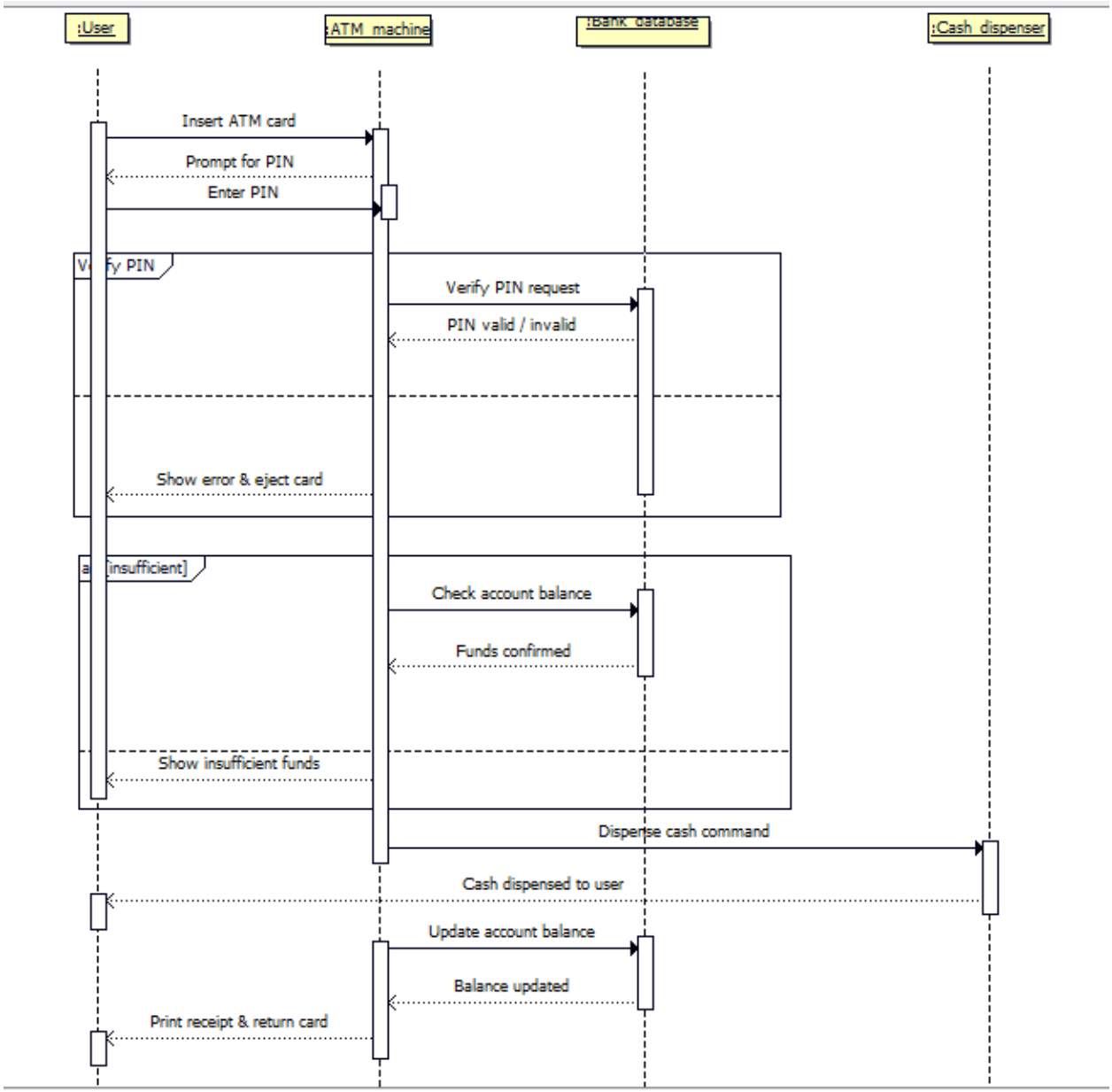
:User
:ATM machine
:Bank database
:Cash dispenser
Insert ATM card
Prompt for PIN
Enter PIN
Verify PIN request
PIN valid / invalid
Show error & eject card
[insufficient]
Check account balance
Funds confirmed
Show insufficient funds
Dispense cash command
Cash dispensed to user
Update account balance
Balance updated
Print receipt & return card

Task 02: Design a Sequence Diagram

Imagine a scenario where a user is ***checking out items from an online store***. The ***sequence starts with the user selecting items and adding them to the cart***. They ***proceed to the checkout process***, where they ***enter their shipping details and payment information***. The ***system verifies the payment and processes the order***. ***Finally, the user receives a confirmation of the order***. This ***sequence involves interactions between the user interface***, ***shopping cart system, payment gateway, and order processing system.***

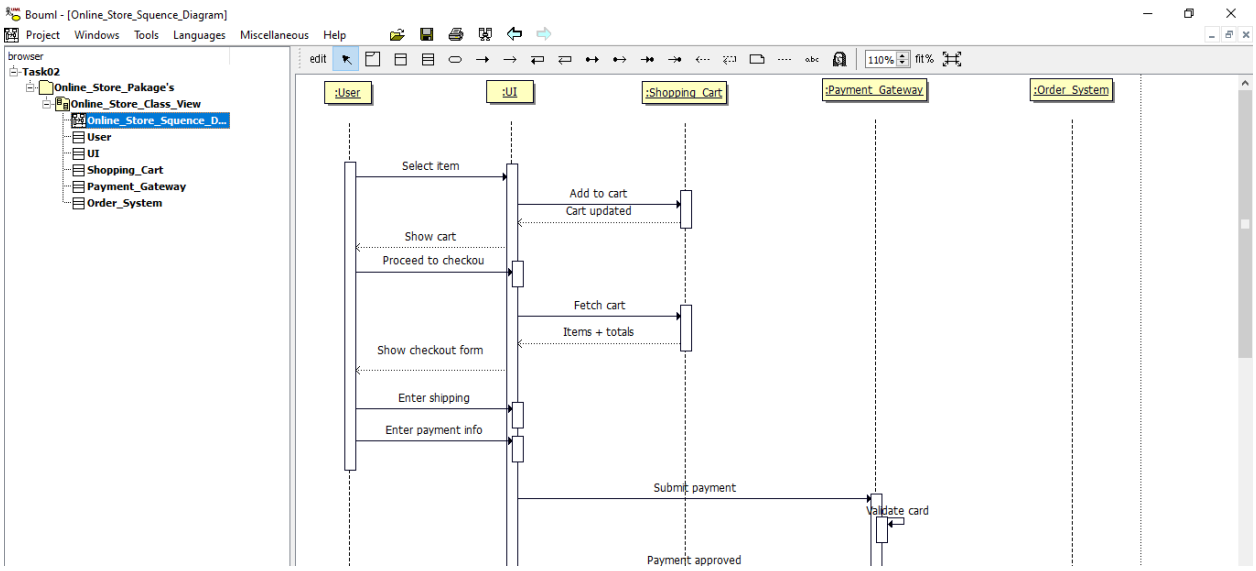

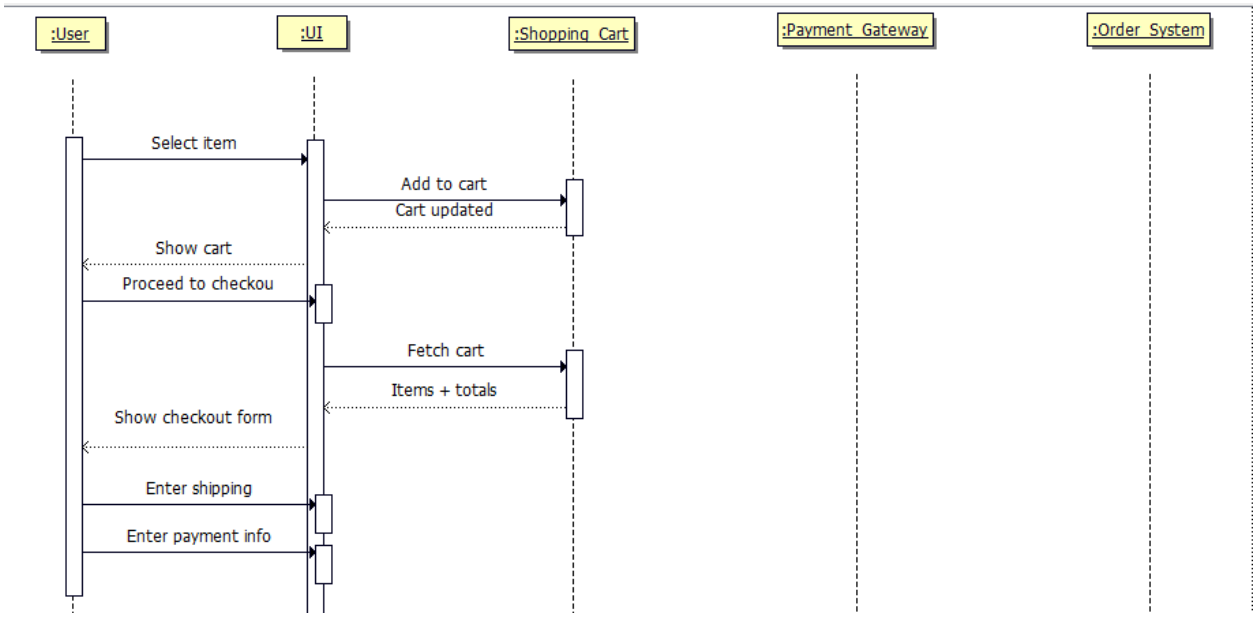

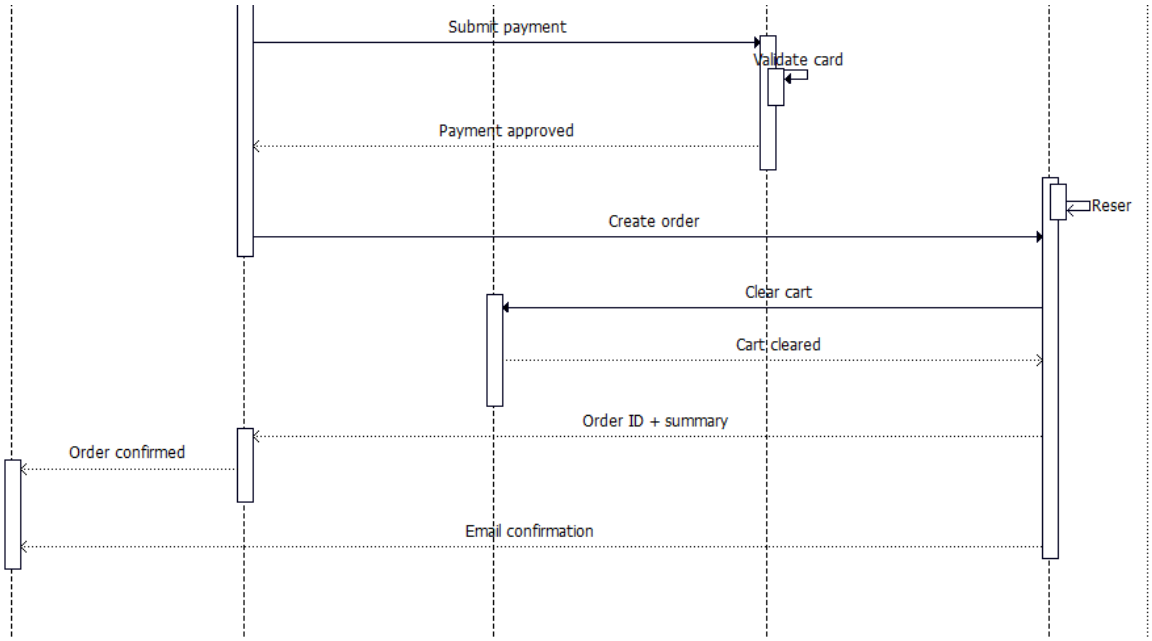

Task 03: Draw an Activity diagram

In the ***online checkout journey, the user initiates the checkout process after browsing and adding desired items to their cart***. An activity diagram would detail the subsequent steps***. First, they review the cart contents and confirm quantities***. This might involve ***checking for any applicable discounts or entering coupon codes. Next, they enter their shipping information, specifying the delivery address***. The system may ***offer alternative shipping options with varying costs and estimated delivery times***. Following this, the ***user securely enters their payment details***. ***The system then verifies the payment information with a secure payment gateway, ensuring sufficient funds and authorization***. Upon ***successful verification, the order is processed***. The ***system creates an order record, updates inventory levels for purchased items, and generates a confirmation email sent to the user***. This ***email typically summarizes the order details, including items, shipping information, and estimated delivery timeframe***. The ***activity diagram would visually represent this flow, highlighting decision points like applying coupon codes and showing the seamless transition between activities until the successful order placement***.

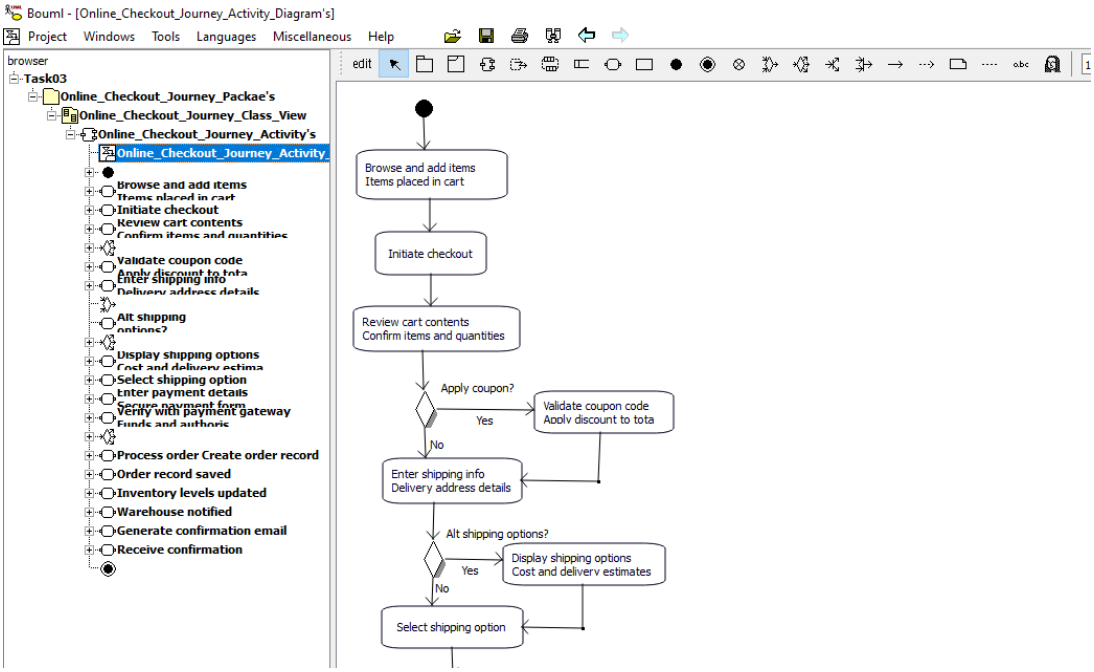
BouuI - [Online_Checkout_Journey_Activity_Diagram's]
Project Windows Tools Languages Miscellaneous Help
browser
Task03
Online_Checkout_Journey_Packae's
Online_Checkout_Journey_Class_View
Online_Checkout_Journey_Activity's
Online_Checkout_Journey_Activity_
Browse and add items
Initiate checkout
Review cart contents
Validate coupon code
Alt shipping
Display shipping options
Select shipping option
Enter payment details
Verify with payment gateway
Process order Create order record
Order record saved
Inventory levels updated
Warehouse notified
Generate confirmation email
Receive confirmation
edit
Browse and add items
Items placed in cart
Initiate checkout
Review cart contents
Confirm items and quantities
Apply coupon?
Yes
Validate coupon code
Apply discount to tota
No
Enter shipping info
Delivery address details
Alt shipping options?
Yes
Display shipping options
Cost and delivery estimates
No
Select shipping option

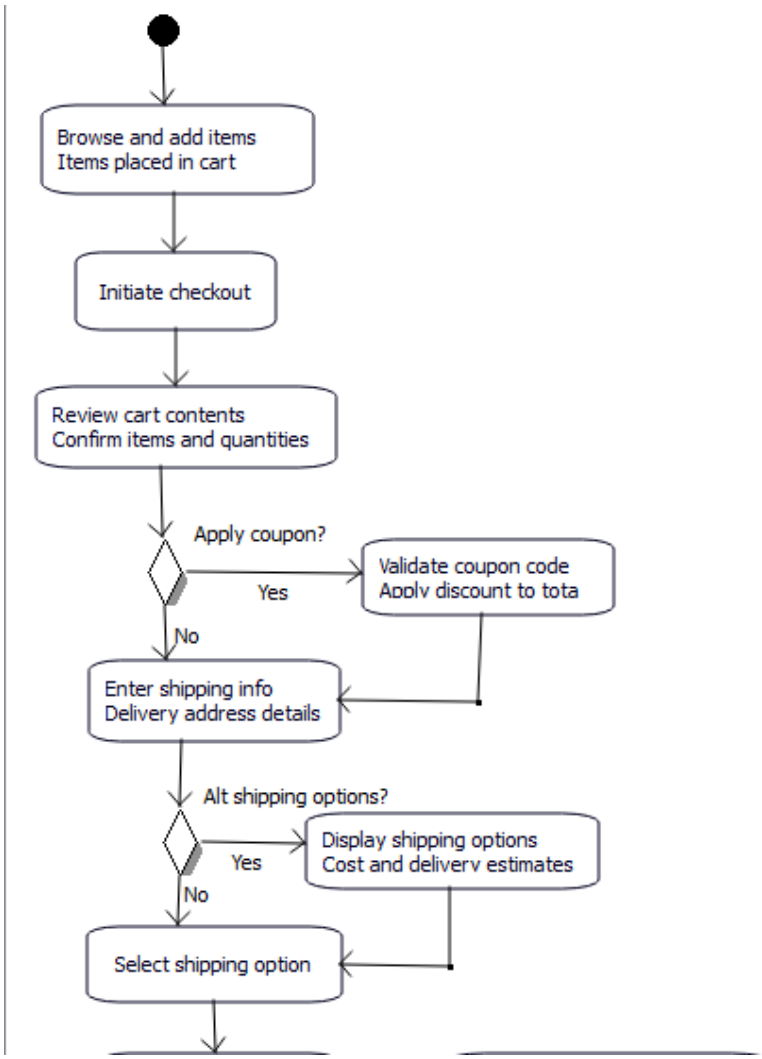
Browse and add items
Items placed in cart
Initiate checkout
Review cart contents
Confirm items and quantities
Apply coupon?
Yes
Validate coupon code
Apply discount to tota
No
Enter shipping info
Delivery address details
Alt shipping options?
Yes
Display shipping options
Cost and delivery estimates
No
Select shipping option

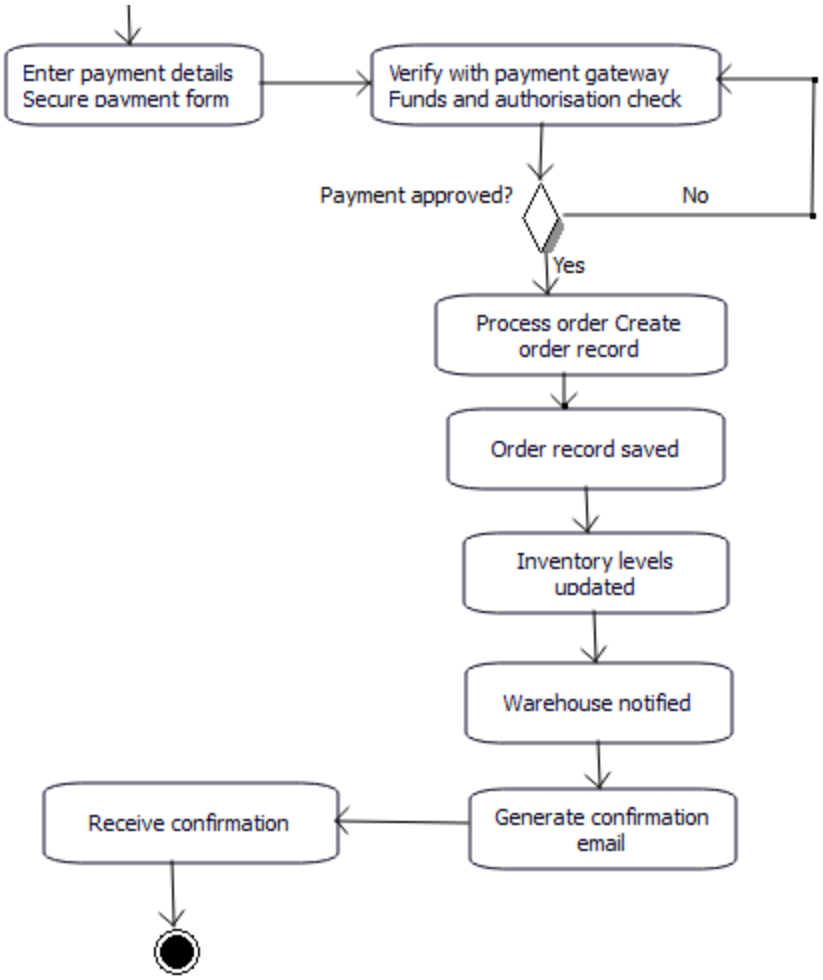
Enter payment details Secure payment form
Verify with payment gateway Funds and authorisation check
Payment approved?
No
Yes
Process order Create order record
Order record saved
Inventory levels updated
Warehouse notified
Generate confirmation email
Receive confirmation