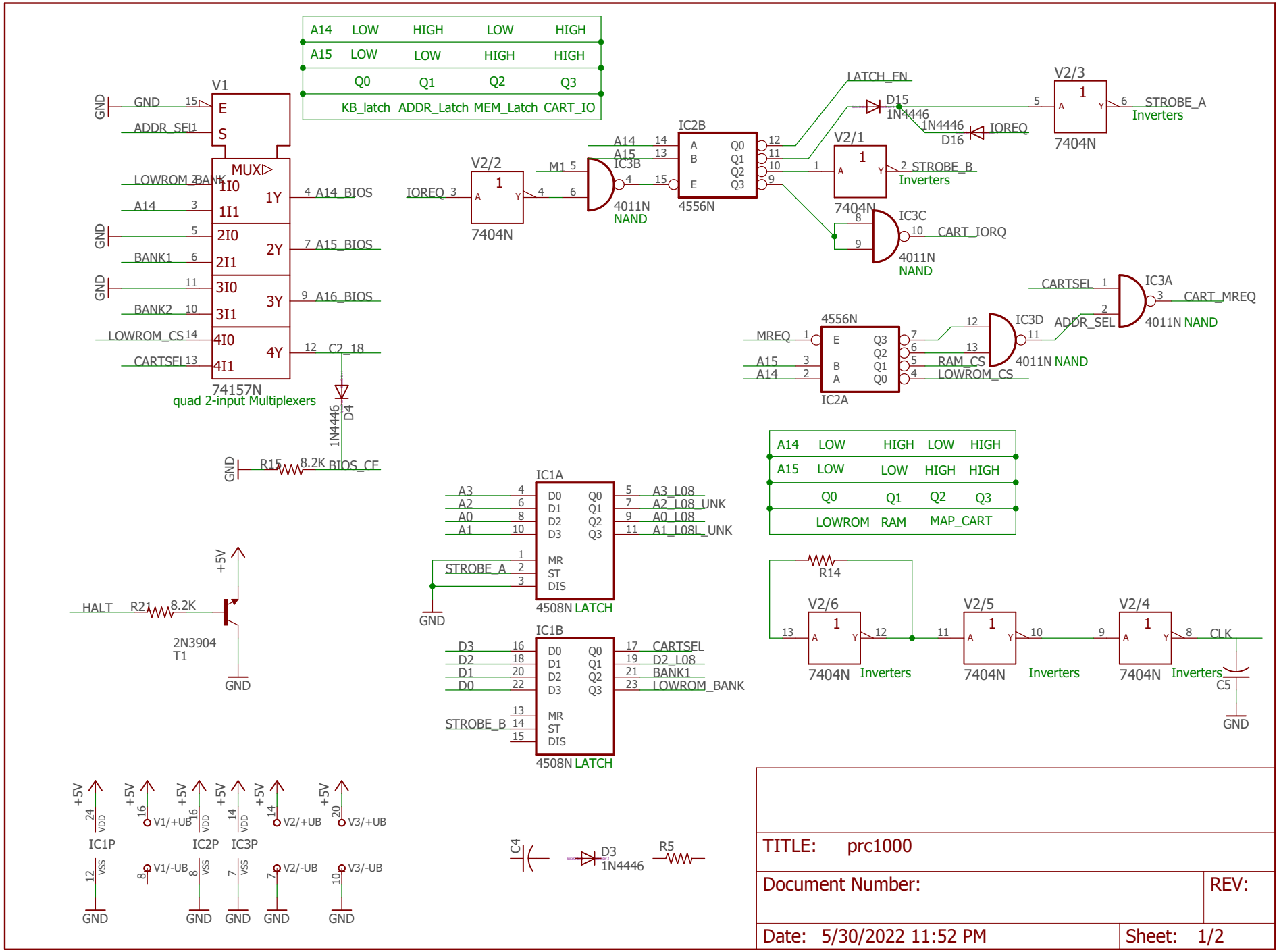
A14 LOW HIGH LOW HIGH
A15 LOW LOW HIGH HIGH
Q0 Q1 Q2 Q3
KB_latch ADDR_Latch MEM_Latch CART_IO
V1
GND
ADDR_SEL
E
S
MUX
LOWROM_BANK
A14
BANK1
BANK2
LOWROM_CS
CARTSEL
1I0
1I1
2I0
2I1
3I0
3I1
4I0
4I1
1Y
2Y
3Y
4Y
A14_BIOS
A15_BIOS
A16_BIOS
C2_18
74157N
quad 2-input Multiplexers
1N4446
D4
R15
8.2K
BIOS_CE
IOREQ
V2/2
7404N
M1
IC3B
4011N
NAND
IC2B
4556N
LATCH_EN
D15
1N4446
D16
IOREQ
V2/1
STROBE_B
Inverters
V2/3
STROBE_A
IC3C
CART_IORQ
CARTSEL
IC3A
CART_MREQ
ADDR_SEL
IC3D
MREQ
RAM_CS
LOWROM_CS
IC2A
A14 LOW HIGH LOW HIGH
A15 LOW LOW HIGH HIGH
Q0 Q1 Q2 Q3
LOWROM RAM MAP_CART
IC1A
A3
A2
A0
A1
A3_L08
A2_L08_UNK
A0_L08
A1_L08L_UNK
STROBE_A
MR
ST
DIS
4508N LATCH
IC1B
D3
D2
D1
D0
CARTSEL
D2_L08
BANK1
LOWROM_BANK
STROBE_B
R14
V2/6
V2/5
V2/4
CLK
C5
+5V
HALT
R21
8.2K
2N3904
T1
IC1P
IC2P
IC3P
V1/+UB
V2/+UB
V3/+UB
V1/-UB
V2/-UB
V3/-UB
C4
D3
1N4446
R5
TITLE: prc1000
Document Number:
REV:
Date: 5/30/2022 11:52 PM
Sheet: 1/2

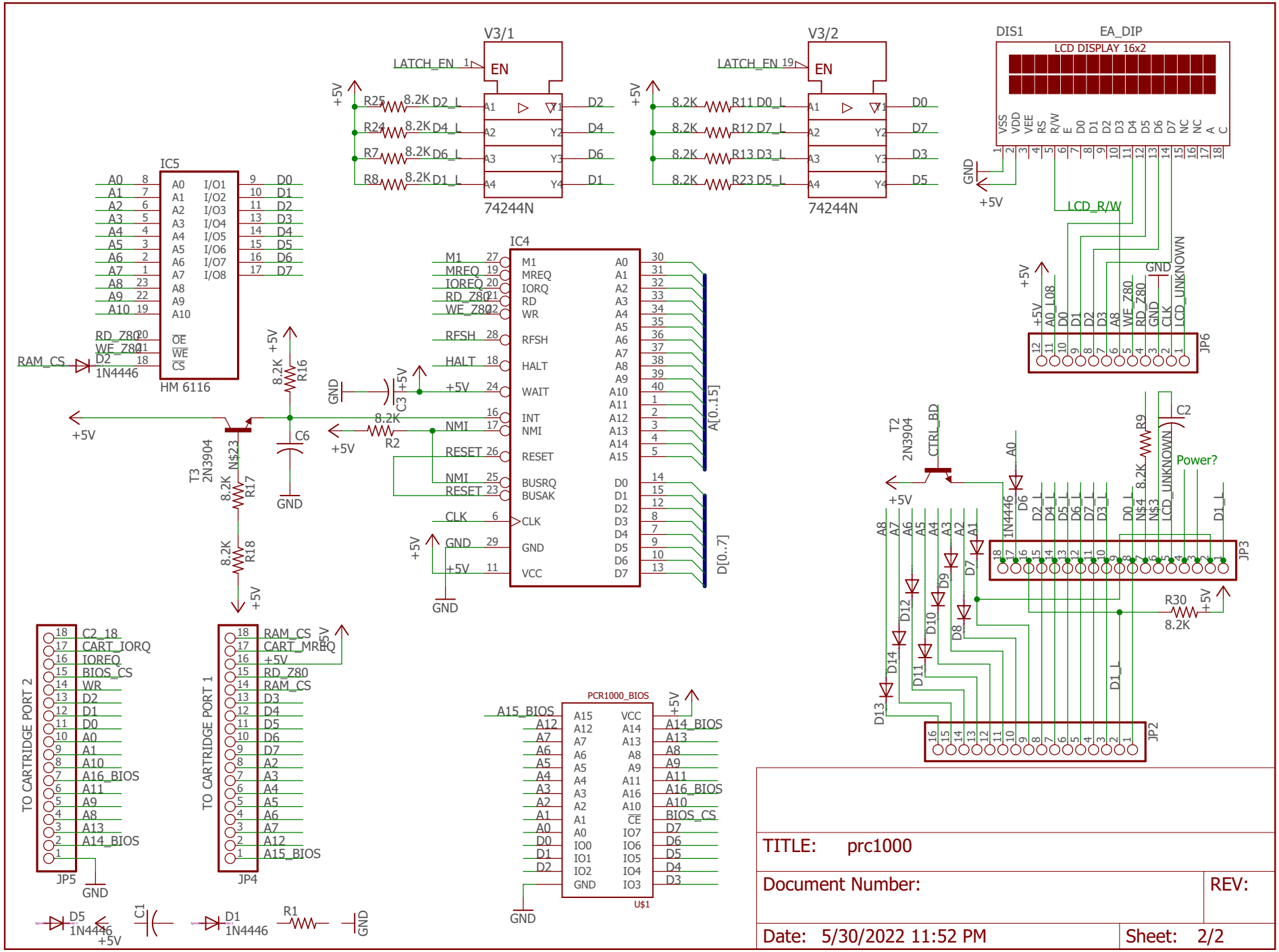
V3/1
LATCH_EN
EN
74244N
V3/2
LATCH_EN
EN
74244N
DIS1
EA_DIP
LCD DISPLAY 16x2
IC5
HM 6116
IC4
RAM_CS
1N4446
T3
2N3904
T2
2N3904
CTRL_BD
Power?
JP6
JP3
JP2
JP5
JP4
TO CARTRIDGE PORT 2
TO CARTRIDGE PORT 1
PCR1000_BIOS
U$1
A15_BIOS
A14_BIOS
BIOS_CS
LCD_R/W
LCD_UNKNOWN
A[0..15]
D[0..7]
TITLE: prc1000
Document Number:
REV:
Date: 5/30/2022 11:52 PM
Sheet: 2/2