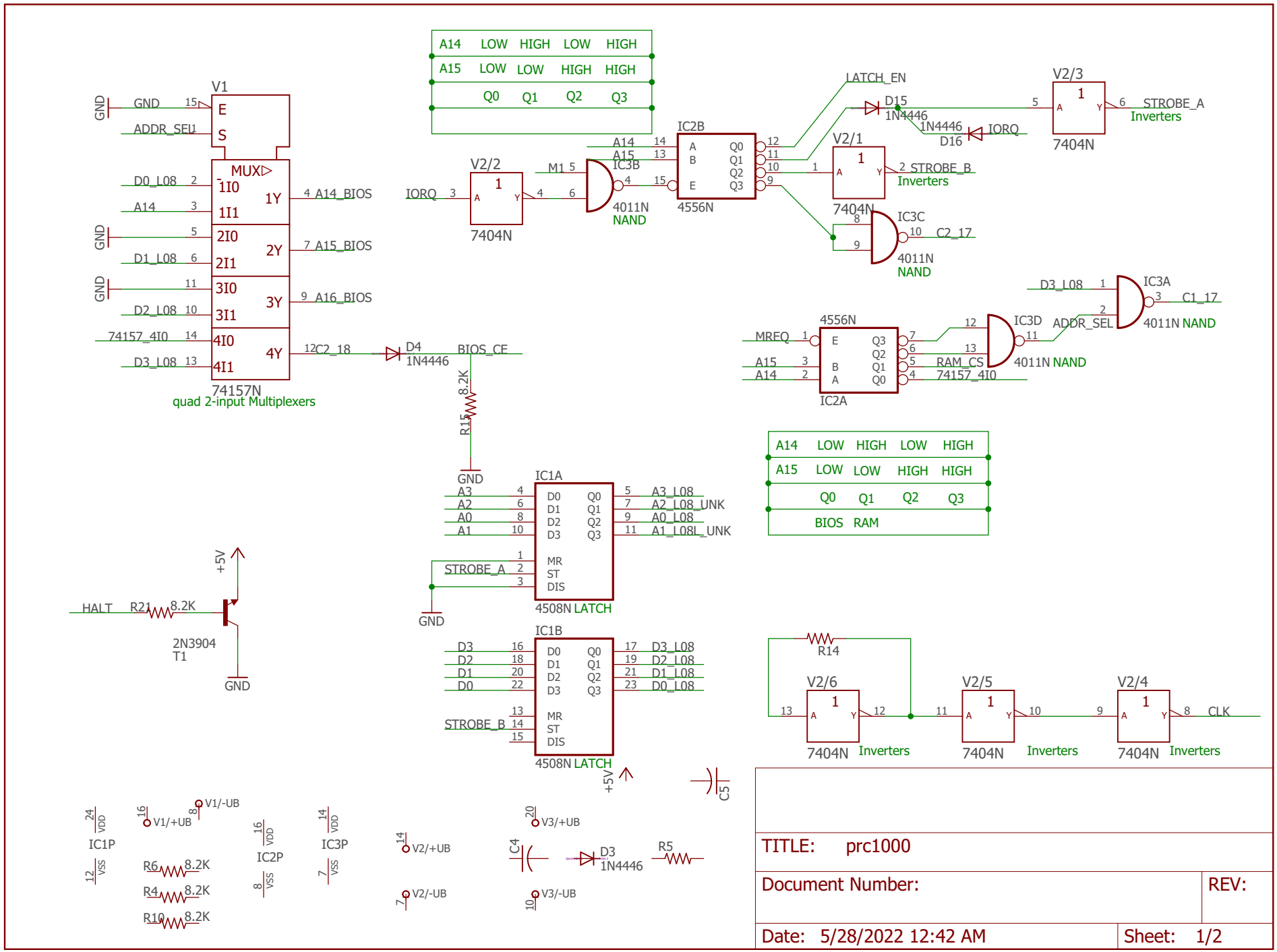
A14 LOW HIGH LOW HIGH
A15 LOW LOW HIGH HIGH
Q0 Q1 Q2 Q3
V1
GND
ADDR_SEL
MUX
1I0
1I1
1Y
A14_BIOS
D0_L08
A14
2I0
2I1
2Y
A15_BIOS
D1_L08
3I0
3I1
3Y
A16_BIOS
D2_L08
74157_4I0
4I0
4I1
4Y
C2_18
D3_L08
74157N
quad 2-input Multiplexers
D4
1N4446
BIOS_CE
8.2K
R15
IC2B
4556N
IC3B
4011N
NAND
V2/2
7404N
IORQ
M1
LATCH_EN
D15
1N4446
D16
V2/1
STROBE_B
Inverters
IC3C
C2_17
V2/3
STROBE_A
IC3A
C1_17
ADDR_SEL
IC3D
RAM_CS
MREQ
IC2A
A14 LOW HIGH LOW HIGH
A15 LOW LOW HIGH HIGH
Q0 Q1 Q2 Q3
BIOS RAM
IC1A
A3_L08
A2_L08_UNK
A0_L08
A1_L08L_UNK
STROBE_A
4508N LATCH
+5V
HALT
R21
2N3904
T1
IC1B
D3_L08
D2_L08
D1_L08
D0_L08
STROBE_B
R14
V2/6
V2/5
V2/4
CLK
C5
IC1P
IC2P
IC3P
V1/-UB
V1/+UB
V2/+UB
V2/-UB
V3/+UB
V3/-UB
R6
R4
R10
C4
D3
R5
TITLE: prc1000
Document Number:
REV:
Date: 5/28/2022 12:42 AM
Sheet: 1/2

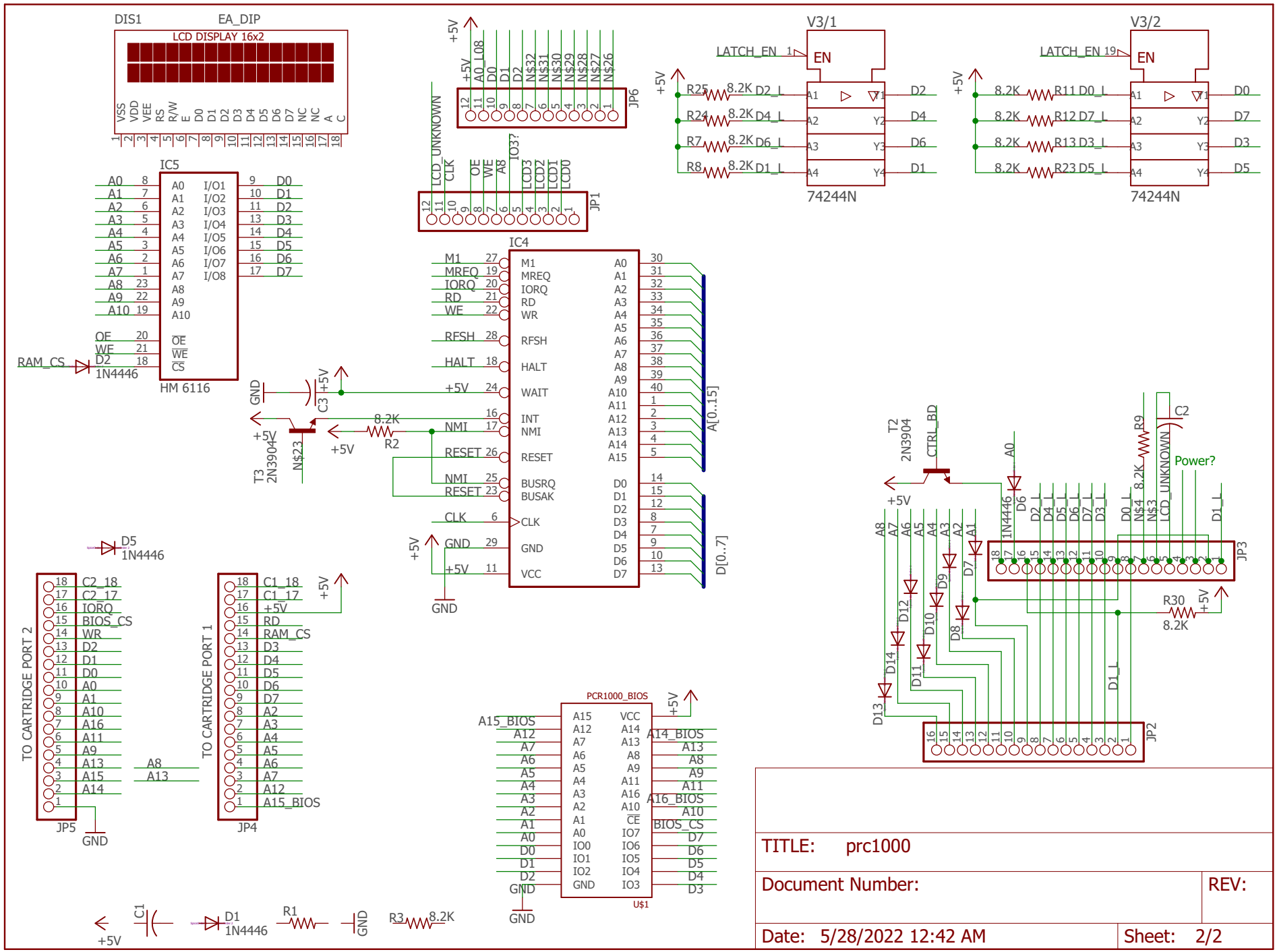
DIS1
EA_DIP
LCD DISPLAY 16x2
IC5
HM 6116
IC4
JP6
JP1
V3/1
V3/2
74244N
74244N
TO CARTRIDGE PORT 2
TO CARTRIDGE PORT 1
JP5
JP4
PCR1000_BIOS
U$1
JP3
JP2
T2
2N3904
T3
2N3904
CTRL_BD
Power?
A[0..15]
D[0..7]
TITLE: prc1000
Document Number:
REV:
Date: 5/28/2022 12:42 AM
Sheet: 2/2