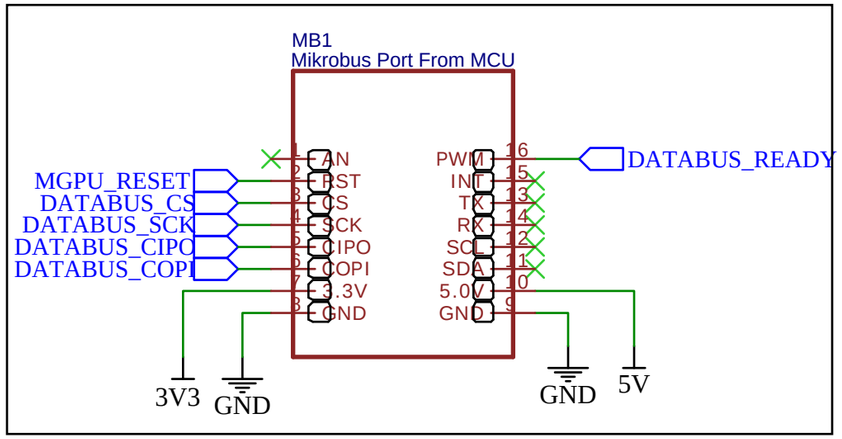

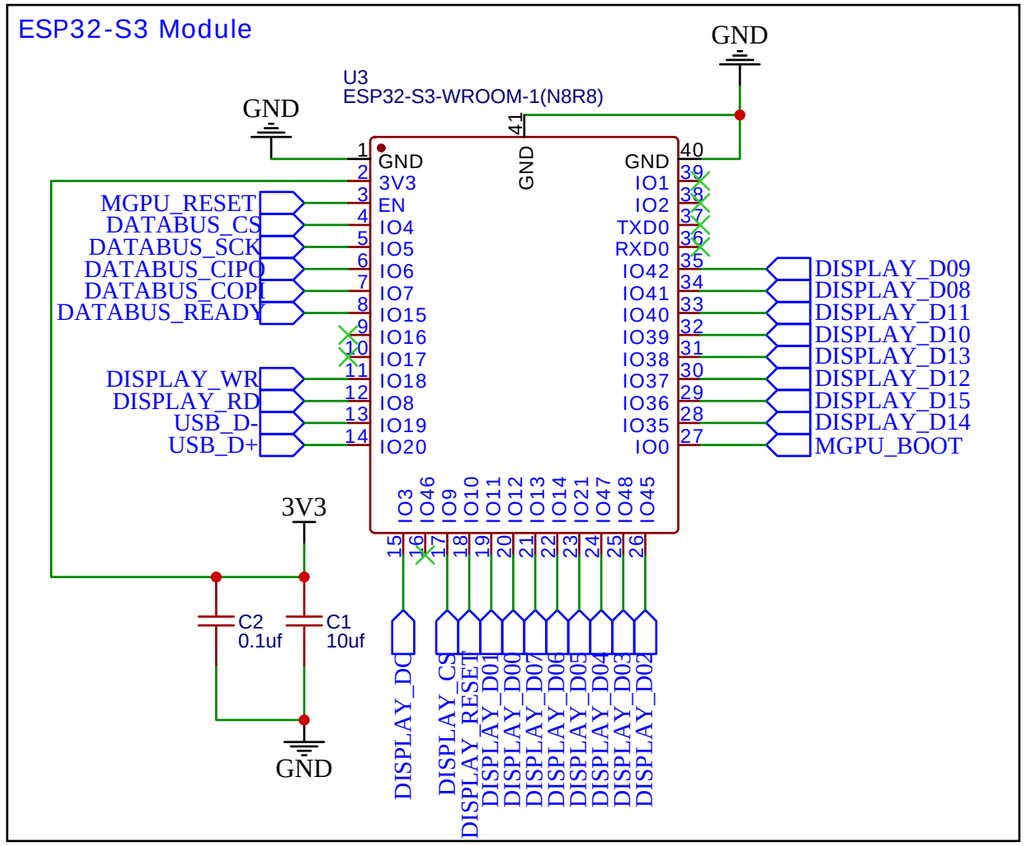

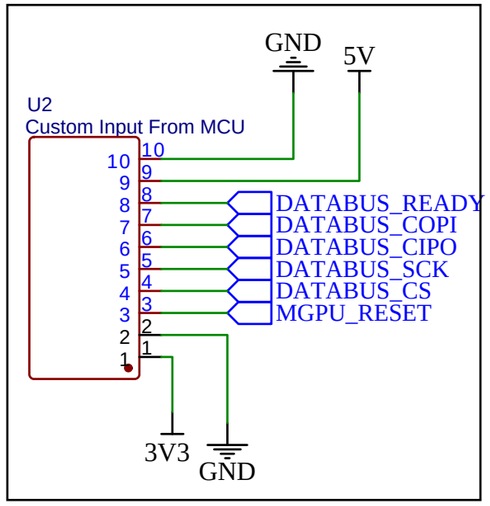

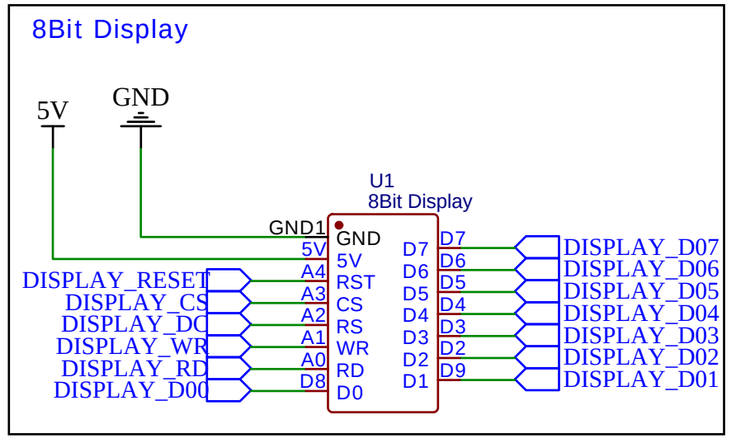

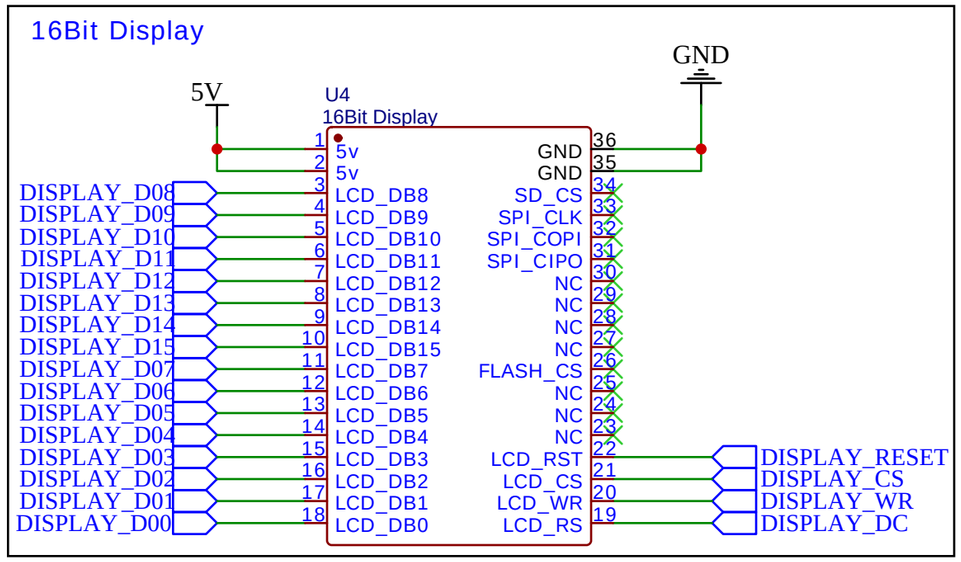

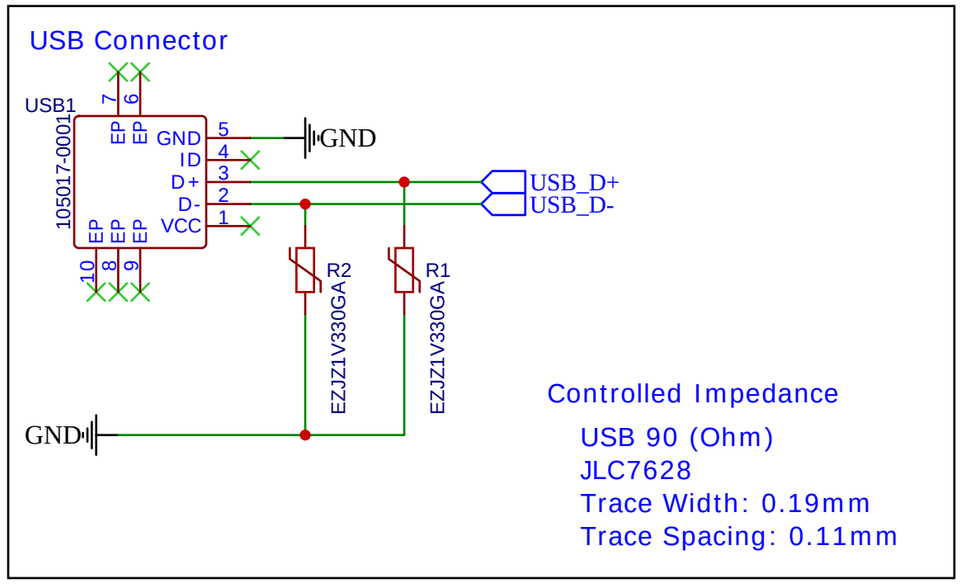

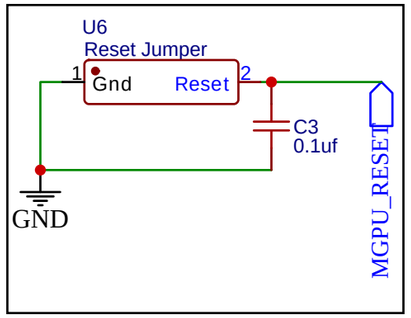

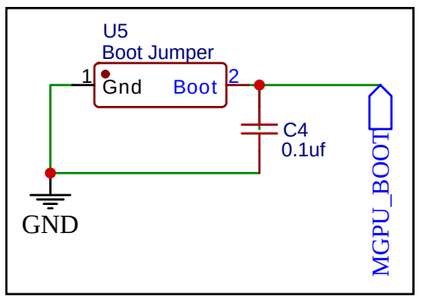

TITLE: Microgpu ESP32-S3 Embedded		REV: 1.0
	Company:	Sheet: 1/1
	Date: 2023-11-01 Drawn By: Matthew Shapiro	