BeeLight

Variant: PRELIMINARY

2025-06-19

Rev + (Unreleased)

Page	Index	Page	Index	Page	Index	Page	Index
1	Cover Page	11	Error: XML File not found	21	Error: XML File not found	31	Error: XML File not found
2	Error: XML File not found	12	Error: XML File not found	22	Error: XML File not found	32	Error: XML File not found
3	Error: XML File not found	13	Error: XML File not found	23	Error: XML File not found	33	Error: XML File not found
4	Error: XML File not found	14	Error: XML File not found	24	Error: XML File not found	34	Error: XML File not found
5	Error: XML File not found	15	Error: XML File not found	25	Error: XML File not found	35	Error: XML File not found
6	Error: XML File not found	16	Error: XML File not found	26	Error: XML File not found	36	Error: XML File not found
7	Error: XML File not found	17	Error: XML File not found	27	Error: XML File not found	37	Error: XML File not found
8	Error: XML File not found	18	Error: XML File not found	28	Error: XML File not found	38	Error: XML File not found
9	Error: XML File not found	19	Error: XML File not found	29	Error: XML File not found	39	Error: XML File not found
10	Error: XML File not found	20	Error: XML File not found	30	Error: XML File not found	40	Error: XML File not found

TOP VIEW

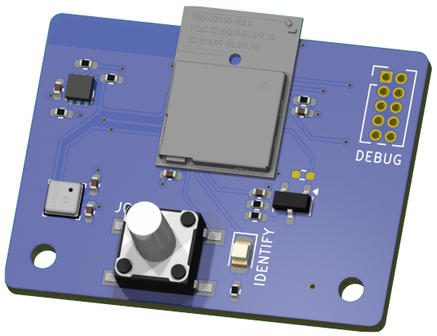

BOTTOM VIEW

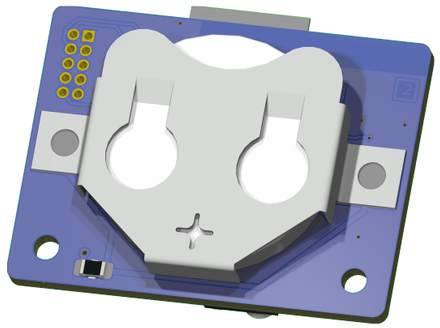

NOTES

Comment

Not fitted components are marked as ✗

DRAFT - Very early stage of schematic, ignore details.
PRELIMINARY - Close to final schematic.
CHECKED - There shouldn't be any mistakes. Contact the engineer if you find any.
RELEASED - A board with this schematic has been sent to production.

Date: 19-Jun-2025

DESIGN CONSIDERATIONS

DESIGN NOTE: Example text for informational design notes.

DESIGN NOTE: Example text for debug notes.

DESIGN NOTE: Example text for cautionary design notes.

DESIGN NOTE: Example text for critical design notes.

LAYOUT NOTE: Example text for critical layout guidelines.

Comments:	Company: null		Variant: PRELIMINARY	Git Hash: 0c20f1f
	Board Name: BeeLight		Project Name: BeeLight	
Sheet Title:	File Name: BeeLight.kicad_sch	Designer: Daniel Kampert	Date: 2025-06-05	Revision: + (Unreleased)
Sheet Path: /		Reviewer:	Size: A3	Sheet: 1 of 5

[2]

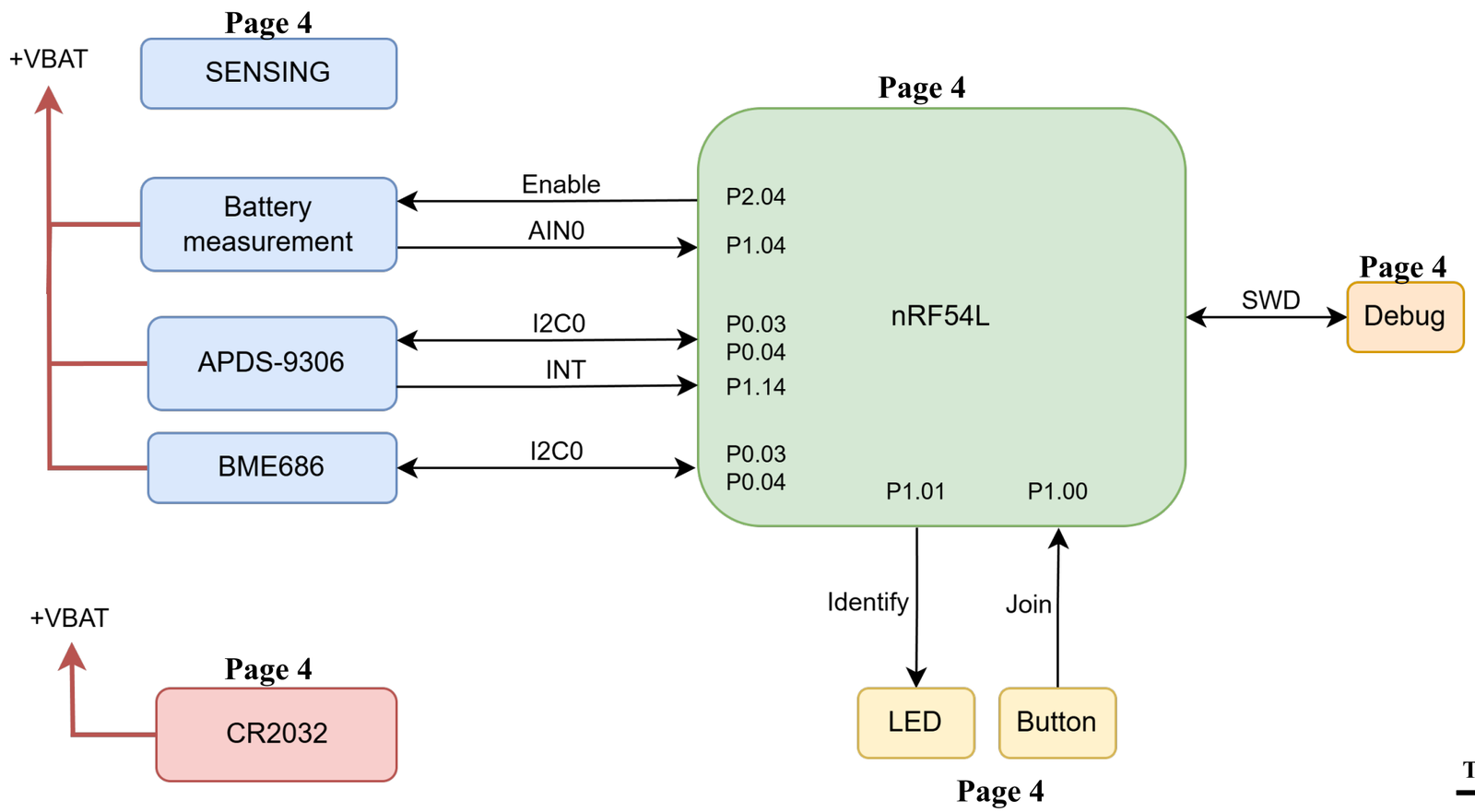

Target specifications:

Input voltage:	1.7 - 3.5 V
Current consumption	??
Spec 3	??
Spec 4	??

Comments:	Company: null		Variant: PRELIMINARY	Git Hash: 0c20f1f
	Board Name: BeeLight		Project Name: BeeLight	
Sheet Title:	File Name: Block Diagram.kicad_sch	Designer: Daniel Kampert	Date: 2025-06-05	Revision: + (Unreleased)
Sheet Path: /Block Diagram/		Reviewer:	Size: A3	Sheet: 2 of 5

[3]

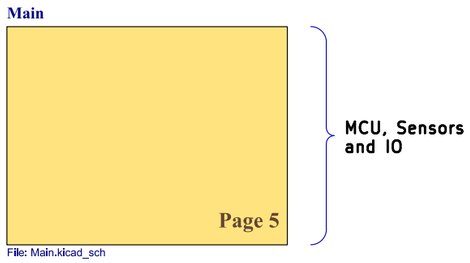

Comments:	Company: null		Variant: PRELIMINARY	Git Hash: 0c20f1f
	Board Name: BeeLight		Project Name: BeeLight	
Sheet Title:	File Name: Project Architecture.kicad_sch	Designer: Daniel Kampert	Date: 2025-06-05	Revision: + (Unreleased)
Sheet Path: /Project Architecture/		Reviewer:	Size: A3	Sheet: 3 of 5

[5]

${RELEASE_TITLE_1.0.0}

${RELEASE_BODY_1.0.0}

${RELEASE_TITLE_1.0.1}

${RELEASE_BODY_1.0.1}

${RELEASE_TITLE_1.0.2}

${RELEASE_BODY_1.0.2}

${RELEASE_TITLE_1.1.0}

${RELEASE_BODY_1.1.0}

Comments:	Company: null		Variant: PRELIMINARY	Git Hash: 0c20f1f
	Board Name: BeeLight		Project Name: BeeLight	
Sheet Title:	File Name: Revision History.kicad_sch	Designer: Daniel Kampert	Date: 2025-06-05	Revision: + (Unreleased)
Sheet Path: /Revision History/		Reviewer:	Size: A4	Sheet: 5 of 5

[4]

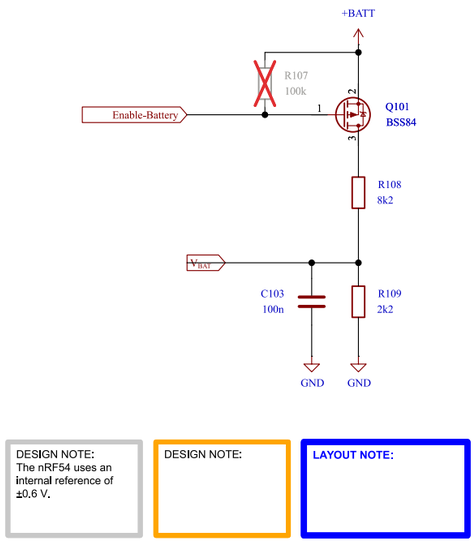

Battery measurement

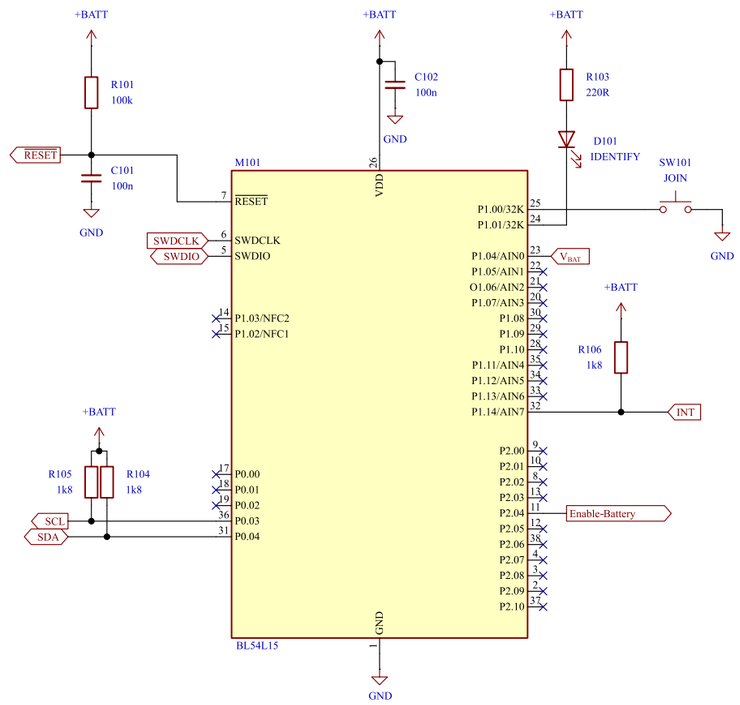

MCU

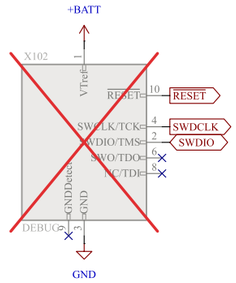

Debug connector

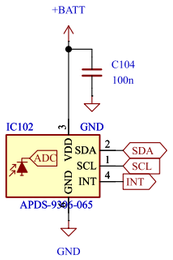

Light sensor

Power Supply

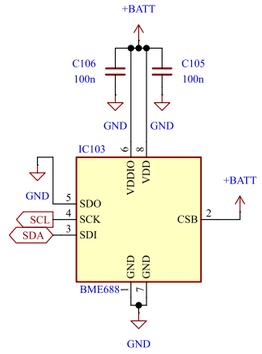

Gas, Pressure, Temperature & Humidity

Comments:	Company: null		Variant: PRELIMINARY	Git Hash: 0c20f1f
	Board Name: BeeLight		Project Name: BeeLight	
Sheet Title:	File Name: Main.kicad_sch	Designer: Daniel Kampert	Date: 2025-06-05	Revision: + (Unreleased)
	Sheet Path: /Project Architecture/Main/	Reviewer:	Size: A3	Sheet: 4 of 5