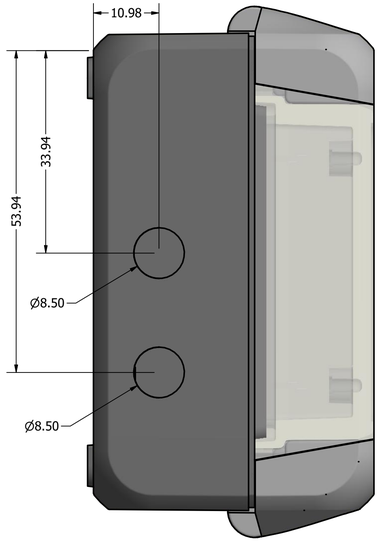

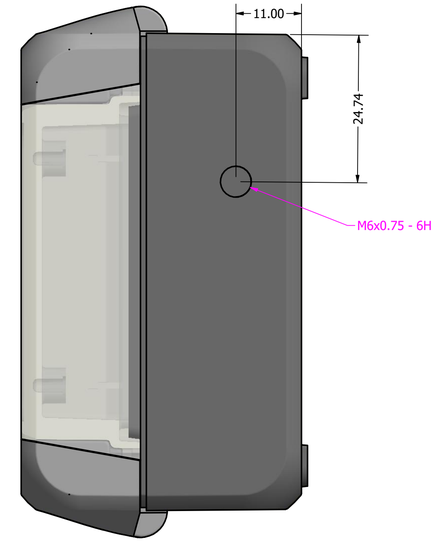


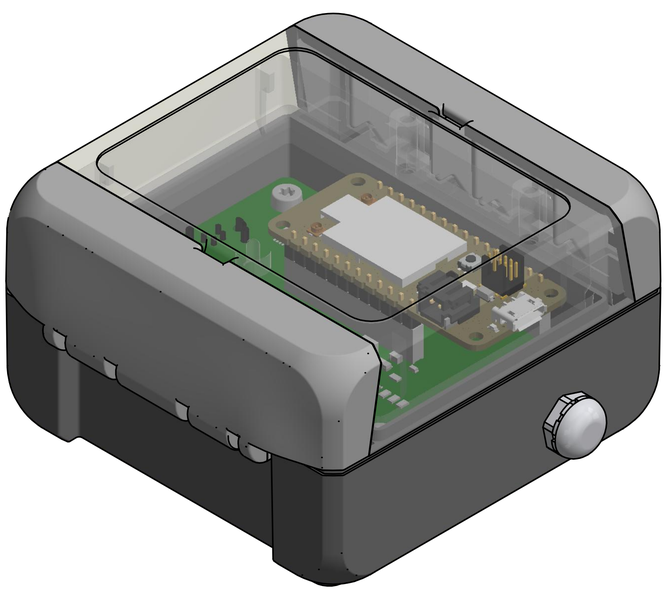

| BAUTEILLISTE | | | |
|---|---|---|---|
| OBJEKT | ANZAHL | BAUTEILNUMMER | BESCHREIBUNG |
| 1 | 1 | 96021114_B-080805-PC-V0-G-7024 | |
| 2 | 1 | 52041060_DAE-M6-7035 | |
| 3 | 1 | PCBSensorHub | KiCad electronic assembly |
| 4 | 2 | 59006986_DIBLZ-AK-30x5-I M3-10 | |
| 5 | 2 | WUERTH 40023 6 cheese head screw ISO 14580 3x6 Blank | STEP AP214 |

| | | |
|---|---|---|
| DRAWN Daniel Kampert | 25.07.2020 | Kampis-Elektroecke |
| CHECKED Daniel Kampert | 25.07.2020 | TITLE |
| QA | | SensorHub Housing |
| MFG Daniel Kampert | 25.07.2020 | |
| APPROVED Daniel Kampert | 25.07.2020 | SIZE D / DWG NO / REV 1.0 |
| | | SCALE 2 : 1 / SHEET 1 OF 1 |