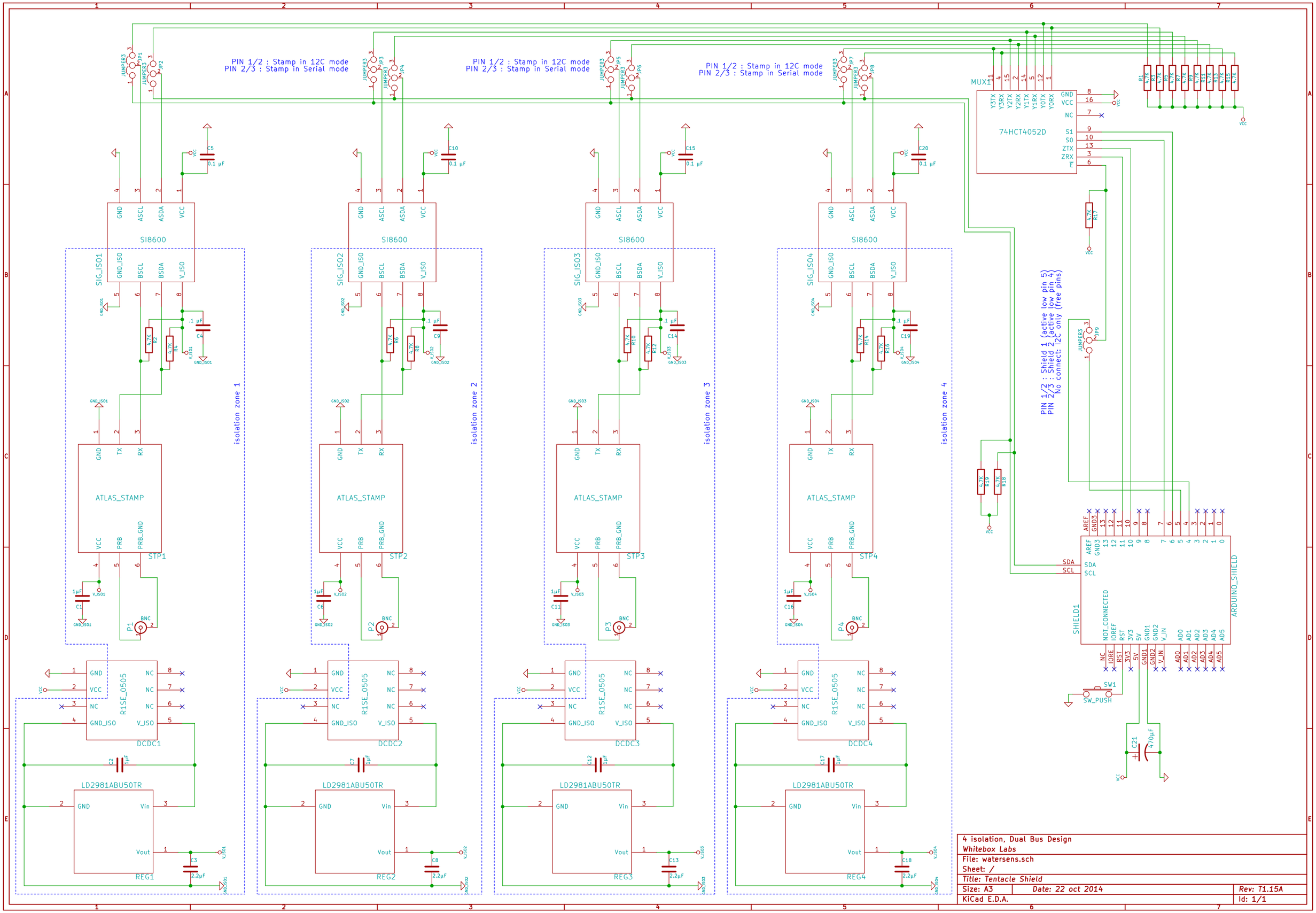
PIN 1/2 : Stamp in 12C mode
PIN 2/3 : Stamp in Serial mode
PIN 1/2 : Shield 1 (active low pin 5)
PIN 2/3 : Shield 2 (active low pin 4)
No connect: I2C only (free pins)
SI8600
ATLAS_STAMP
R1SE_0505
LD2981ABU50TR
74HCT4052D
ARDUINO_SHIELD
isolation zone 1
isolation zone 2
isolation zone 3
isolation zone 4
4 isolation, Dual Bus Design
Whitebox Labs
File: watersens.sch
Sheet: /
Title: Tentacle Shield
Size: A3
Date: 22 oct 2014
Rev: T1.15A
KiCad E.D.A.
Id: 1/1