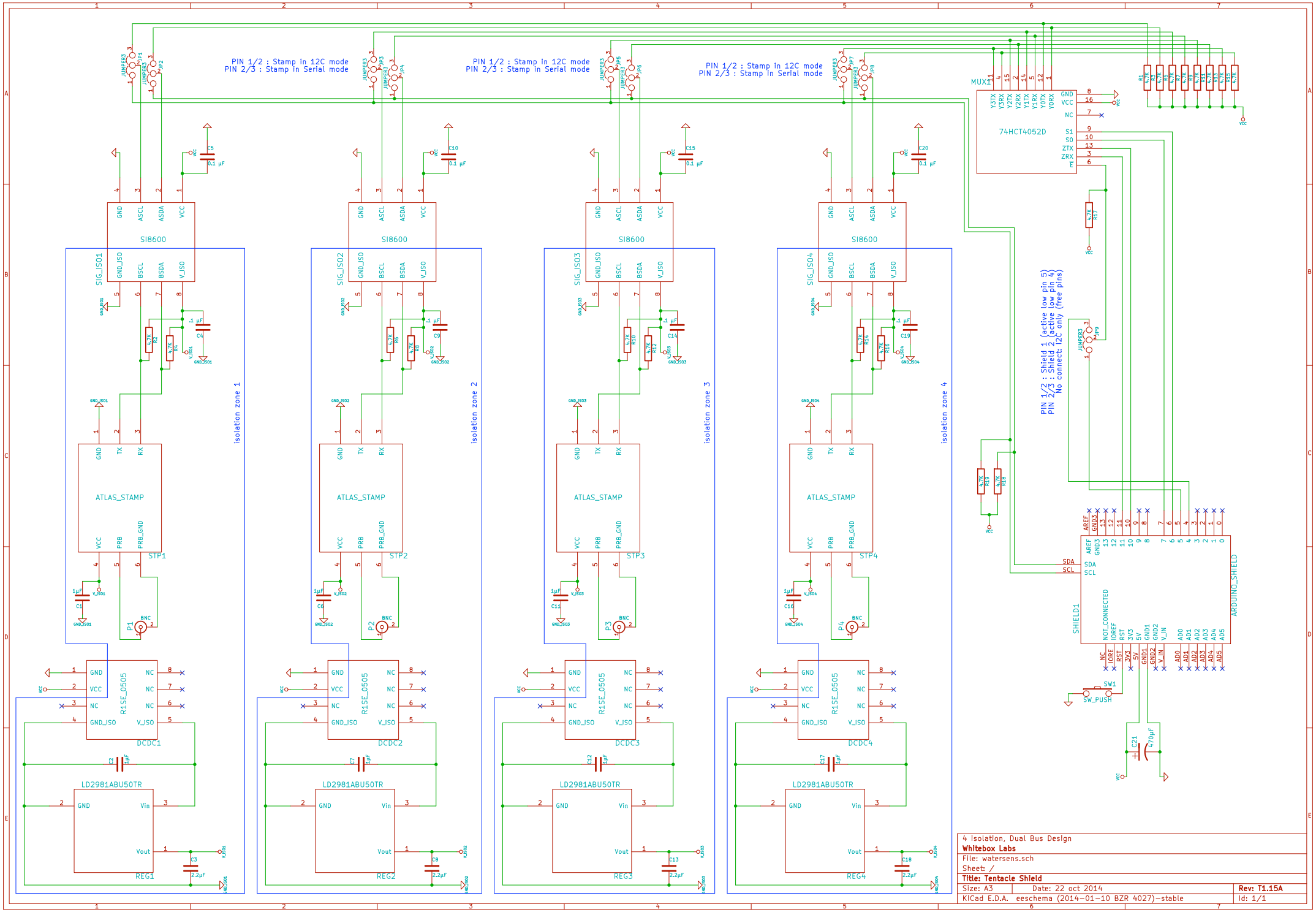
PIN 1/2 : Stamp In 12C mode
PIN 2/3 : Stamp In Serial mode
PIN 1/2 : Stamp In 12C mode
PIN 2/3 : Stamp In Serial mode
PIN 1/2 : Stamp In 12C mode
PIN 2/3 : Stamp In Serial mode
PIN 1/2 : Shield 1 (active low pin 5)
PIN 2/3 : Shield 2 (active low pin 4)
No connect: I2C only (free pins)
MUX1
74HCT4052D
SI8600
ATLAS_STAMP
R1SE_0505
LD2981ABU50TR
isolation zone 1
isolation zone 2
isolation zone 3
isolation zone 4
STP1
STP2
STP3
STP4
DCDC1
DCDC2
DCDC3
DCDC4
REG1
REG2
REG3
REG4
SHIELD1
ARDUINO_SHIELD
SW_PUSH
4 isolation, Dual Bus Design
Whitebox Labs
File: watersens.sch
Sheet: /
Title: Tentacle Shield
Size: A3
Date: 22 oct 2014
Rev: T1.15A
KiCad E.D.A. eeschema (2014-01-10 BZR 4027)-stable
Id: 1/1