DEPARTMENT OF COMPUTER TECHNOLOGY

Mid Term Test

CS6104 DATA STRUCTURES AND ALGORITHMS

Time 1.30Hrs **Marks 50**

Part A (10 x 2 = 20)
Answer All Questions

1. Which is the exclusive property of any algorithm? Why is it regarded so?
2. How the tight bound time complexity of any algorithm is defined? Is it applicable for all algorithms? Justify.
3. Assume a stack of integers is implemented in an array of integers named *iStack*. The *top* of the stack is stored in *iStack[0]*. Write the necessary lines of statements to find whether the stack is empty or not and push an integer onto the stack.
4. A large integer is in a linked list with one digit per node and the least significant digit occupies the first position in the linked list. Write a function that increments the integer represented in the linked list.
5. A tree is said to be skewed if no node has left or no node has right. Write the necessary code segment to check whether the given tree is skewed or not.
6. Name any two data structures used for representing graphs. What are their respective advantages?
7. Write the recurrence relations representing the time complexities of conventional matrix multiplication and Strassen's matrix multiplication of matrices of order nxn using divide and conquer strategy. How much of overhead is added to Strassen's algorithm while saving one multiplication?
8. Differentiate Greedy approach from Dynamic programming for algorithm designs.
9. What is memoization? Where is it used? What it contributes?
10. State the reasons for why and when Quick sort performs better than merge sort.

Part B (6 x 5 = 30)
Answer ANY SIX Questions

11. Analyze the following code segment and derive its worst case and best case time complexities with appropriate justification.

```
for j = 2 to n do
        x = a [ j ]
        i = j -1
        while i > 0 and a [ i ] > x do
                a [ i + 1 ] = a [ i ]
                i = i – 1
        a [ i + 1] = x
```

12. Write the necessary functions to *insert*, *delete* and *search* an element in a circular queue whose implementation is in an array of size N.

13. A list values is said to be palindrome list if the respective values from first to last and last to first are same. Write a function that checks whether the given linked list is palindrome list or not. Does your algorithm incur space overhead and if so, how much?

14. Write a function that finds the smallest and largest values from the given linked list and place them in the first and last nodes respectively using minimum number of interchanges. What is the time and space complexity of your method? Is it optimal? Justify.

15. Construct a binary search tree from the list of values (*23, 40, 70, 12, 50, 19, 15*). Convert the resulting tree into a threaded binary tree by replacing the NULL links. Write a non-recursive routine that will return the inorder successor of the given value.

16. For the graph G given here with 8 vertices and 13 edges, construct

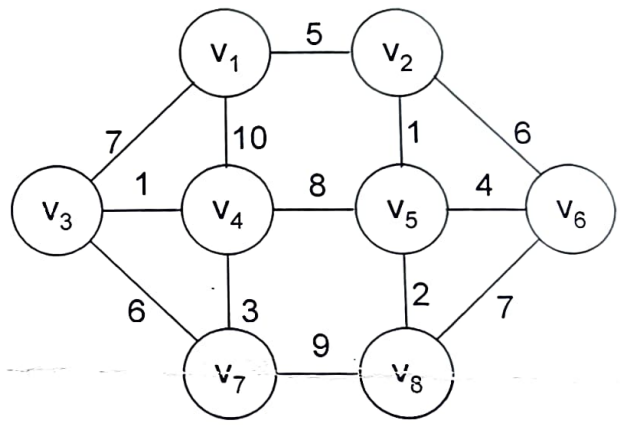

a. the spanning tree by using depth first traversal starting from vertex v_1. Assume the adjacent vertices are returned in the increasing order of the cost to reach those adjacent vertices without any ambiguity.

b. the minimum cost spanning tree using Prim's algorithm with starting vertex v_1.

17. An instance of a Knapsack problem is given as [P = ($p_1, p_2, p_3, \ldots p_n$), W = ($w_1, w_2, w_3, \ldots w_n$), n, m], where P has the profits, W has the weights, n is the problem size and m is the Knapsack size. Define a greedy strategy which is expected to give maximum profit. Write an algorithm for your greedy strategy.

18. How many distinct possible ways are there to compute the product of a sequence of n matrices $A_1, A_2, A_3, \ldots A_n$. Consider the list $p_{0..4}$ = (15, 5, 10, 20, 25) denoting the dimensions of 4 matrices, where the order of A_i is $p_{i-1} \times p_i, 1 \le i \le 4$. Compute the optimal order of the matrix multiplications and the number of scalar multiplications required for the optimal order.

19. X = < $x_1, x_2, x_3, \ldots x_m$> and Y = < $y_1, y_2, y_3, \ldots y_n$> are any two sequences of values. Define the optimal sub structure for finding the longest common sub sequence form X and Y. Design an algorithm to compute only the length of the longest common sub sequence. The algorithm has to compute the length in top-down and should take advantage of the overlapped sub structure of this problem.

Roll Number: 209503557

ANNA UNIVERSITY – UNIVERSITY DEPARTMENT
B.E. (FULL-TIME) DEGREE EXAMINATION, NOV/DEC 2019

Third Semester – R2018 (RUSA)
Branch: Computer Science & Engineering

CS6104 – DATA STRUCTURES & ALGORITHMS
(End-Semester Examination)

Time: Three Hours | Max. Marks: 100

Part A ($10 \times 2 = 20$ Marks) 13
Answer **ALL** Questions

1. Answer the following questions with either true or false. Assume there are n elements in the data structure. No explanation necessary.

   1 (a) One can implement a stack based on a linked list so that each individual push/pop operation time is $O(1)$.

   (b) The core data structure of Depth-First Search is a queue.

   (c) It is possible to append two linked lists in time $O(1)$.

   (d) Adding an element to a heap has worst-case time complexity $O(\log n)$.

2. You have an array with 10,00,000 distinct elements in random order. You have to search the array 100 times. What will result in less work? Sorting the array with merge sort and then doing the searches using binary search OR just doing the searches with linear search (without sorting). Justify your answer with calculations. [Tip: $\log_2(1,000,000) \approx 20$, which is the complexity of one binary search.] 2

3. One can convert an algorithm to a program, but the reverse is not always true. Why? 0

4. What is the asymptotic time-complexity of the following pseudo-code fragment in terms of n? 2

```
for i = 1 to n do
   for j = i to n do
      for k = 1 to 3 do
       Count++;
```

5. What characteristics of a problem would suggest that backtracking is a good approach to solve that problem? 1

6. How many links have to be updated to insert a node in a doubly linked list. Which are they? 2

7. Find the post-order sequence for the following tree.

2

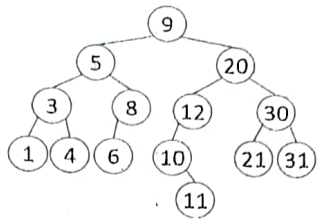

8. Suppose you have the following hash table, implemented using linear probing. The hash function we are using is the identity function, $h(x) = x$.

2

0	1	2	3	4	5	6	7	8
9	18		12	3	14	4	21	

In which order could the elements have been added to the hash table?

```
Choice-A 12, 3, 14, 18, 4, 9, 21
Choice-B 12, 14, 3, 9, 4, 18, 21
Choice-C 9, 12, 14, 3, 4, 21, 18
Choice-D 12, 9, 18, 3, 14, 21, 4
```

There are several correct answers, and you should give all of them. Assume that the hash table has never been resized, and no elements have been deleted yet.

0 9. State principle of optimality.

1 10. When do you say a problem is NP-hard?

Part B ($8 \times 8 = 64$ Marks) 30

Answer ANY EIGHT Questions

1 11. Describe a linear time algorithm to find the ith smallest item from a set of n values. Prove that algorithm takes only linear time.

12. A bank has 15 million Euro, which can be invested into stocks of four companies (1, 2, 3, and 4) to get more profits. The table reports, for each company, the net revenue and the amount of money (in million) that must be invested into it. Solve the problem with a branch and bound algorithm. Note that partial investment is not possible.

0

Company	1	2	3	4
Revenue	10	10	12	18
Money	2	4	6	9

13. The *n-queens problem* (also known as the peaceful queens problem) is the problem of determining the number of ways that n queens can be placed on an $n \times n$ chess board so that no queen threatens any other. Device a backtracking algorithm that solves the n-queens problem.

3

14. Five products are to be manufactured weekly on the same machine from Monday to Friday. The table below gives the cost of switching the machine from one product to another product. Assume that initially the machine is programmed to start producing product A, and that starts on Monday. Also, it has to produce all the products every week with one product per day, and set to get ready to start for the next week, at the end of the week. Our aim is to produce all the products in a week with minimum switching time. You are now advised to use a branch and bound algorithm technique to find what order the machine suppose to switch between products, and find the minimum switch cost for a week.

↓ from/ to →	A	B	C	D	E
A	∞	3	6	7	5
B	3	∞	2	8	1
C	5	3	∞	6	2
D	1	3	5	∞	1
E	4	1	3	8	∞

15. There is a river which flows through a country. There are 8 cities on one side (say left side) of the river and 9 cities on the other side (say right side) of the river. The sequence of 8 cities on the left side of the river are 2,4,6,7,6,5,4,6 and the sequence of 9 cities on the right side of the river are 4,7,5,6,2,7,5,4,3. Assume that we can only build bridges between cities with the same number from both sides. In this problem, you have to determine the maximum number of bridges we can build without any bridges crossing with each other. Design an algorithm for this problem, and illustrate with the given example.

16. A genius student of your class claimed that she has proved $P = NP$. The proof is as follows: It is known that 3-SAT is NP-Complete. Given a Boolean formula in conjunctive normal form with at most three literals per clause, use the distributive law to construct an equivalent formula in disjunctive normal form. For example,

$$(x_1 \vee x_2 \vee \overline{x_3}) \wedge (\overline{x_1} \vee \overline{x_2}) = (x_1 \wedge \overline{x_2}) \vee (x_2 \wedge \overline{x_1}) \vee (\overline{x_3} \wedge \overline{x_1}) \vee (\overline{x_3} \wedge \overline{x_2})$$

Since $DNF\text{-}SAT \in P$, a satisfying assignment for the new formula, and hence for the old formula, can be found in polynomial time. This shows that 3-$SAT \in P$, and hence $P = NP$. What is wrong in the proof?

17. In the knapsack problem, we have a knapsack of volume V and a collection of n objects whose volumes are $v_1, v_2, \cdots, v_n$ and whose costs are $c_1, c_2, \cdots, c_n$, respectively. Your task is to select items, either fully or partially, to pack in your knapsack so that the total cost of those items is maximized, subject to the constraint that the total volume of the selected items does not exceed V . Provide a greedy based algorithm to get maximum profit, and prove that this algorithm always yields the optimal solution.

7

18. Provide the structural definition for Queue, and implement same using arrays and linked lists.

7

2 19. Illustrate, algorithmically, how to insert a node as a right child of its parent in inorder threaded binary tree.

20. In what order does Prim's algorithm add edges to the MST? Whenever there is a choice of nodes, choose the one that comes alphabetically first. Whenever there is a choice of edges, choose the one with the alphabetically first endpoint (if both share an alphabetically first endpoint, use the alphabetical ordering on the other end point).

5

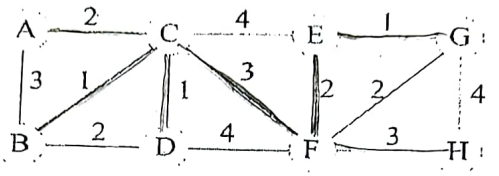

5 21. Explain KMP string matching algorithm for finding a pattern on a text, and analyze the algorithm.

22. Prove that the Hamiltonian cycle problem is in NP-Complete.

Part C ($2 \times 8 = 16$ Marks) 7

Answer **ALL** Questions

23. At the annual meeting of the knights, King Arthur notes that several of knights have started to develop conflicts. Sending his undercover agents, he has managed to find out a list of all possible duelling pairs. He now wishes to exile a small set of knights away so that no duelling pair remains at the annual meeting. Merlin is now set with this task of finding out which knights to send away. Being a perfectionist, Merlin wishes to find the smallest set she could send into exile. However, after much thought, she is unable to find the optimal solution using any efficient algorithm. Explain why? (i.e How did Merlin model the problem? What problem is Merlin trying to solve and why is she unable to do it.)

3

24. Rithika has a string S and its starting index is 1. The string S consists of characters from 1 to 9. As she is very intelligent, she wants to test her brother Vinay. She asked her brother Vinay to count the number of even numbered characters, for every index i. For an index i, the result should be calculated from i to the end of the string. As Vinay doesn't know about programming, he wants you to help him to find the solution.

4

```
SAMPLE INPUT
574674546476
SAMPLE OUTPUT
7 7 7 6 5 5 4 4 3 2 1 1
```

Explanation: For index 1, number of even numbers from 5 to end of the string is 7 so the result of index 1 is 7. Similarly, for index 4, number of even numbers from 6 to end of the string is 6 so the result of index 4 is 6.

*****

RollNo. | | | | | | | | | | |

B.E(FT)ENDSEMESTEREXAMINATIONS–APR / MAY2021

ComputerScienceandEngineering
Semester III
CS6104 DATA STRUCTURES AND ALGORITHMS
(Regulation 2018-RUSA)

Time:3Hours AnswerALLQuestions Max.Marks100

PART-A(10x2=20Marks)

1. Define data abstraction with an example
2. State why queue is termed as linear data structure?
3. What is the minimum and maximum number of nodes in a binary tree of height k?
4. For what type of problems divide and conquer strategy is not suitable? Give an example.
5. How many different spanning trees can be formed for a complete graph with 5 nodes?
6. Differentiate Divide and conquer and Dynamic programming paradigms
7. State the role of bounding function in backtracking strategy for solving problems.
8. Define heap stating its properties
9. What is the time complexity of Naïve string matching algorithm?
10. Characterize NP problems

PART – B (8 x 8 = 64 marks)(Answerany8 questions)

11. Define the asymptotic notations corresponding to best case, worst case and average case analysis of an algorithm. Write the following equation using the three asymptotic notations.

$F(n) = 100\ n^2 + \log n$

12. Write an algorithm to insert a node X after a given node Y in a doubly linked list having a pointer p to the first node.
13. Write the algorithm to convert infix to postfix expression using stack and illustrate with an example.
14. Write recursive algorithms to perform in-order and preorder traversal on a binary tree. Perform in-order and preorder traversal on the following tree and output the sequence

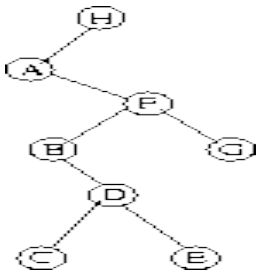

15. Write the algorithm to choose the kth smallest element from a list of n elements. Analyse the time complexity for the same.

16. Solve the Knapsack problem using Greedy strategy.
    Knapsack capacity: 50
    Weight of objects: { 20, 30, 10, 40}
    Corresponding Profit earned : {100, 80, 110, 95}

17. Determine the longest common subsequence between the given sequences A and B using Dynamic programming approach: A: “acdbce” B: “abcbfe”

18. Compare and contrast Backtracking and Branch and bound methods for solving optimization problems. Draw and explain the state space tree structure involved

19. Sort the following list using Heap sort in ascending order. Show the heap at each step of processing

    9, 2, 5, 10, 7, 3, 8, 4, 1, 6

20. When will collision occur during hashing? Explain any one collision resolution method in detail.

21. Explain KMP string matching algorithm in brief.

22. Differentiate between NP Hard and NP complete problems. Explain theory of reducibility.

PART–C(2x8=16marks)

23. Solve the recurrence relation using substitution method and verify using Master’s method

T(n) = 4T(n/2) + n, n >1 and T(n) =1, n=1
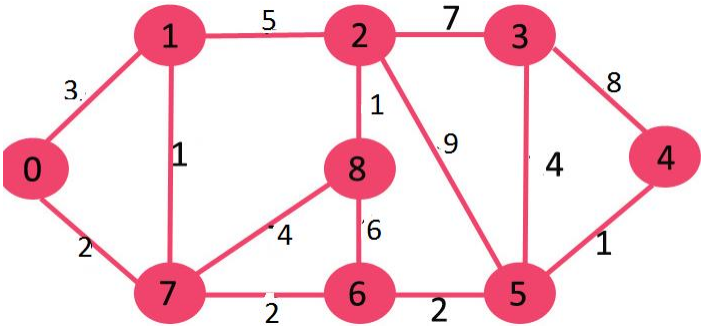
24. Construct the MST for the given graph using Kruskal’s method explaining the method.