AURO PUMPS PVT.LTD.

Estb. 1984 in Technology Transfer from Pompe Vergani SpA of Italy

ACCV

VERTICAL SUBMERGED PUMPS

ACCV VERICAL EXTENDED SHAFT PUMPS

Auro's ACCV series pumps are centrifugal, single stage vertical submerged pumps with a downward axial suction and upward radial discharge. Over 36 different model sizes allow for a wide range of flexibility on duty points to satisfy varied industry requirements. The volute-impeller design is derived from our ACC series end suction pumps in accordance with ISO2858/DIN 24256 standards.

The submergence length is customizable and can be extended with the use of single or multiple intermediate bearings. These intermediate radial bearings provide lateral support to the shaft and are made from various anti-friction materials which are selected in accordance with the liquid characteristics. These bearings are generally lubricated using the pumping fluid itself or, in special applications, external flushing can be provided.

The shape of the base-plate can be customized to fit the dimensions of the customer's vessel or tank.

DESIGN FEATURES

- **Design:** centrifugal, vertical single stage.
- **Pump installation:** wet or dry installation.
- **Impeller:** closed, semi-open or open.
- **External bearing lubrication:** grease lubricated.
- **Sleeve bearing lubrication:** by the pumped liquid or external lubrication.
- **Shaft sealing:** gland packing, single/double mechanical seal, high speed single dry mechanical seal or Magnetic sealing.
- **Heating jacket:** provided on request.
- **Vapor proof assembly:** provided on request.
- **Dry run safety interlock:** provided on request.

TECHNICAL DETAILS

CAPACITY	***upto 1000 m^3/ hour*** — Higher flowrate available on request
HEAD	***upto 160 m***
SIZE	***25 to 250 mm***
SUBMERGENCE LENGTH	***upto 6 m*** — Longer submergence length available on request
TEMPERATURE	***-40°C to + 600°C***
OPERATING FREQUENCY	***50Hz and 60Hz***
MATERIAL OF CONSTRUCTION	***Cast Iron, Cast Steel, WCB, WC6 CF8/CF3 (SS304/304L), CF8M/CF3M (SS316/316L), Alloy-20, Inconel, Monel, Nickel, Hastelloy C276***

SIGNIFICANT FEATURES

1. Externally mounted grease lubricated bearings provides a safe solution for handling hazardous, corrosive and high temperature applications.
2. Shaft sealing flexibility is a big advantage to the customer's using ACCV pumps. The sealing arrangement does not come in contact with the liquid thus providing safe, reliable and leakage free operation.
   Shaft sealing variants are –
   - Gland packing.
   - Mechanical seal: single or double acting mechanical sealing systems with external lubrication.
   - High speed dry seal: High speed dry running mechanical seal for sealing against flammable or toxic fumes without external lubrication.
   - Magnetic drive sealing.
3. Overflow holes prevent the pumped liquid from reaching the shaft sealing chamber.
4. Intermediate bearing and sleeve arrangement provides lateral guide to the shaft. These bearings are lubricated by the pumped fluid or externally lubricated, depending on the application. This ensures minimum wear during continuous operation of the pump.
5. Vapor proof construction provides a safe and reliable pumping solution for applications with flammable fumes like solvents and petrochemicals.

APPLICATIONS

ORGANIC AND INORGANIC CHEMICALS	ACIDS	SOLVENT AND PETROCHEMICALS
CHLOROALKALI AND CAUSTIC SODA	SULPHURIC ACID AND OLEUM	MOLTEN SULFUR
MOLTEN SALTS AND SOLAR POWER PLANTS	HEAT TREATMENT FURNACES AND AUTOMOTIVE PAINT LINES	STEEL PRODUCTION AND PROCESSING
POWER PLANTS AND MINING	FERTILIZER INDUSTRY	NUCLEAR POWER

CROSS SECTION DRAWING ACCV

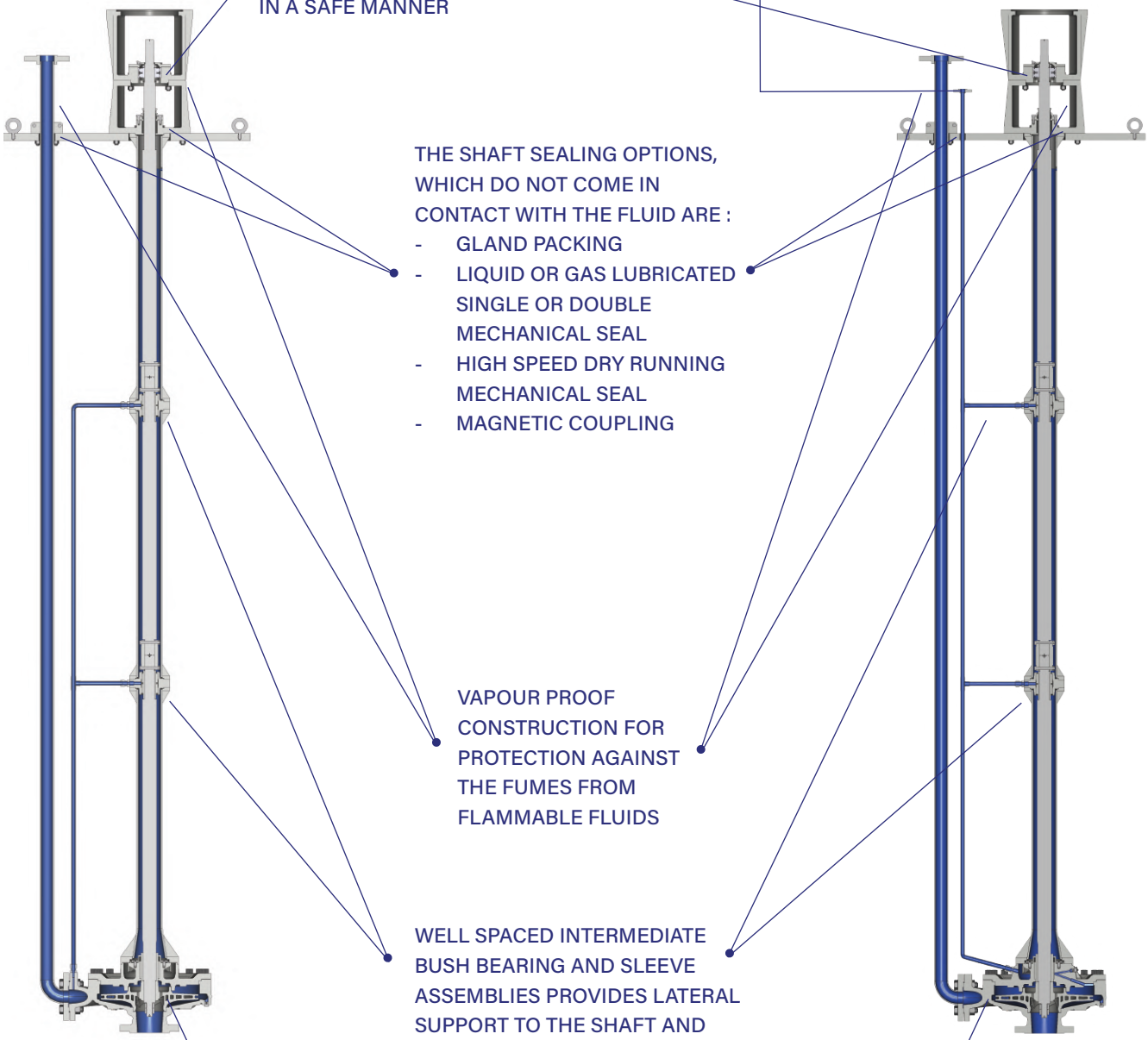

EXTERNALLY MOUNTED GREASE - LUBRICATED BEARING ASSEMBLY ENABLES THE PUMP TO HANDLE HIGH TEMPERATURE AND HAZARDOUS APPLICATIONS IN A SAFE MANNER

EXTERNAL FLUSHING ARRANGEMENT FOR HANDLING MILDLY CONTAMINATED LIQUIDS

THE SHAFT SEALING OPTIONS, WHICH DO NOT COME IN CONTACT WITH THE FLUID ARE :

- GLAND PACKING
- LIQUID OR GAS LUBRICATED SINGLE OR DOUBLE MECHANICAL SEAL
- HIGH SPEED DRY RUNNING MECHANICAL SEAL
- MAGNETIC COUPLING

VAPOUR PROOF CONSTRUCTION FOR PROTECTION AGAINST THE FUMES FROM FLAMMABLE FLUIDS

WELL SPACED INTERMEDIATE BUSH BEARING AND SLEEVE ASSEMBLIES PROVIDES LATERAL SUPPORT TO THE SHAFT AND MINIMISES SHAFT RUNOUT

CLOSED, SEMI - OPEN OR OPEN IMPELLER DESIGN FOR HANDLING A VARIETY OF LIQUIDS

ACCV VERTICAL CANTILEVER PUMPS

A cantilever design and the absence of a submerged bearing and sleeve assembly, which is prone to wear and tear, makes ACCV Cantilever pumps the best solution for pumping liquids laden with abrasive and erosive solids.
A robust shaft design and rotating assembly with double bearings allows these pumps to handle liquids with up to 60% solid concentration over a wide range of particle sizes.

TECHNICAL DETAILS

CAPACITY	*upto 1000 m³/hour*
HEAD	*upto 60 m*
SIZE	*25 to 250 mm*
SUBMERGENCE LENGTH	*upto 2 m*
TEMPERATURE	*-40°C to +900°C*
OPERATING FREQUENCY	*50Hz and 60Hz*
SLURRY HANDLING	*upto 60% concentration*
IMPELLER	*Open type*
SHAFT SEALING	*Gland packing, single/ double mechanical seal, high speed single dry mechanical seal or magnetic sealing*
MATERIAL OF CONSTRUCTION	*Cast Iron, Cast Steel, WCB, WC6 CF8/CF3 (SS304/304L), CF8M/CF3M (SS316/316L), Alloy-20, Inconel, Monel, Nickel, Hastelloy C276*

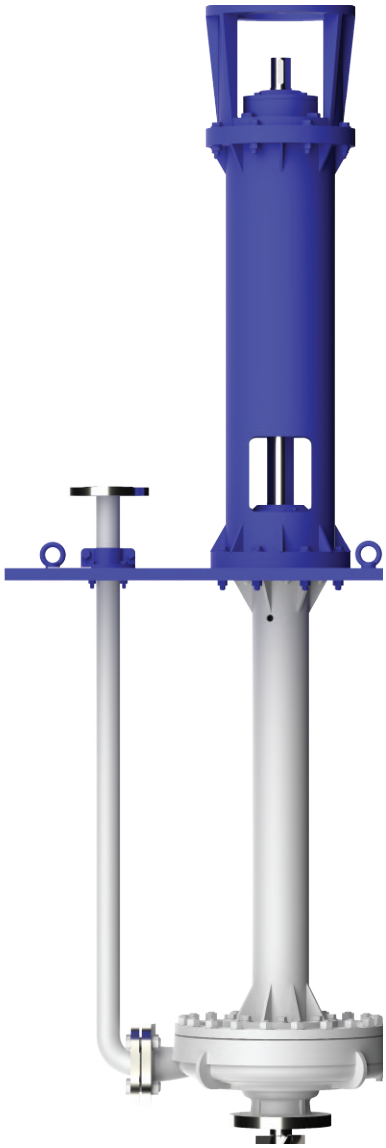

APPLICATIONS

THERMAL AND NUCLEAR POWER PLANTS	CEMENT MANUFACTURING	CAUSTIC SODA & CALCIUM CHLORIDE MANUFACTURING
ACID MANUFACTURING	METAL REFINING AND MINING	MOLTEN SALTS AND MOLTEN METALS
STEEL PRODUCTION AND PROCESSING	HEAVY SOLIDS LADEN FLUIDS	FERTILIZER MANUFACTURING

CROSS SECTION DRAWING ACCV CANTILEVER

A ROBUST SHAFT ASSEMBLY WITH A HEAVY DUTY DOUBLE BEARING AND WELL DIMENSIONED BETWEEN BEARING DISTANCE ENSURES LOW VIBRATION AND LONG LIFE

SHAFT SEALING OPTIONS INCLUDE GLAND PACKING, MECHANICAL SEALING AND MAGNETIC SEALING

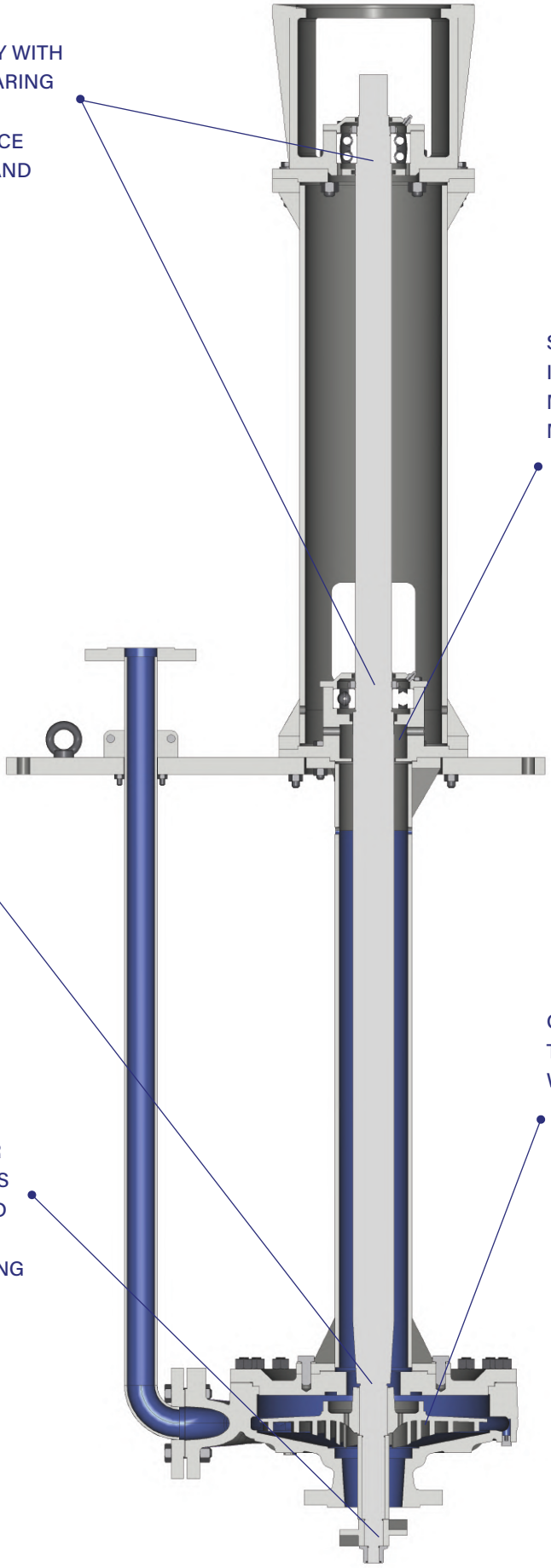

THE ABSENCE OF A SUBMERGED BEARING AND SLEEVE ASSEMBLY ENABLES THE PUMP TO HANDLE LIQUIDS WITH HIGH SLURRY CONTENT

OPEN TYPE IMPELLER LETS THE PUMP HANDLE LIQUIDS WITH LARGER PARTICLE SIZE

SHAFT MOUNTED AGITATOR PREVENTS SOILD PARTICLES FROM SETTLING DOWN AND BREAKS UP THE LARGER PARTICLES BEFORE ENTERING THE VOLUTE ASSEMBLY

ACCV FAMILY CURVES

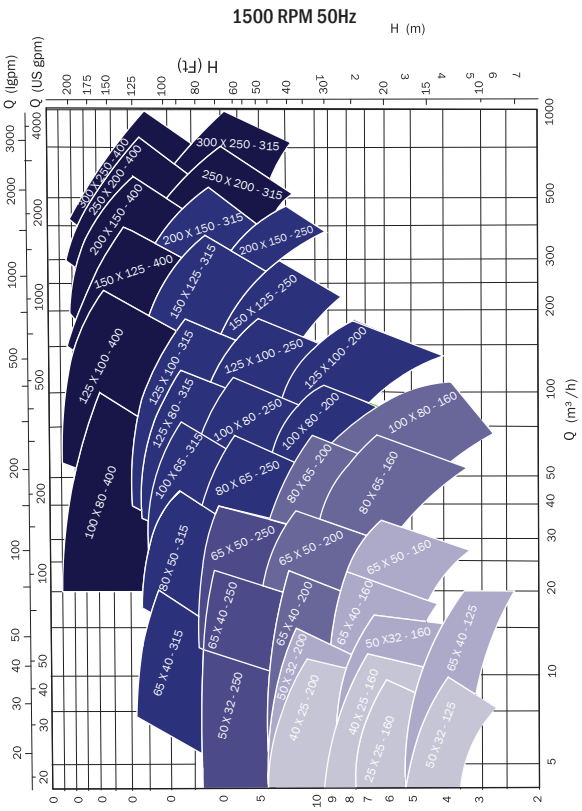

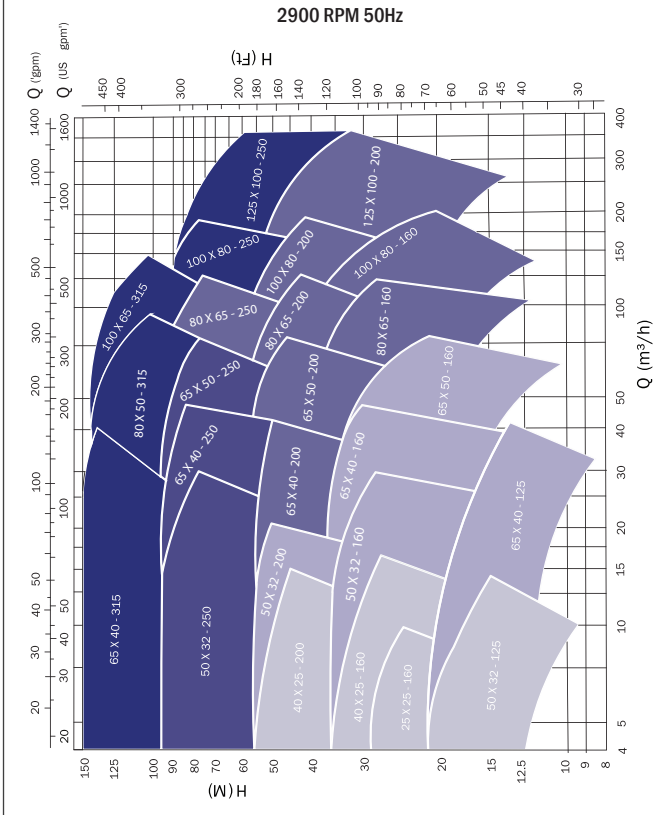

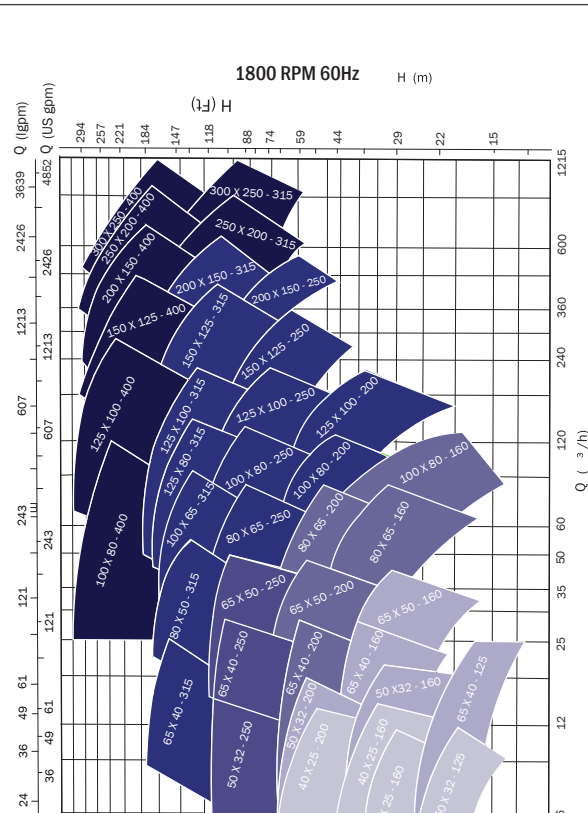

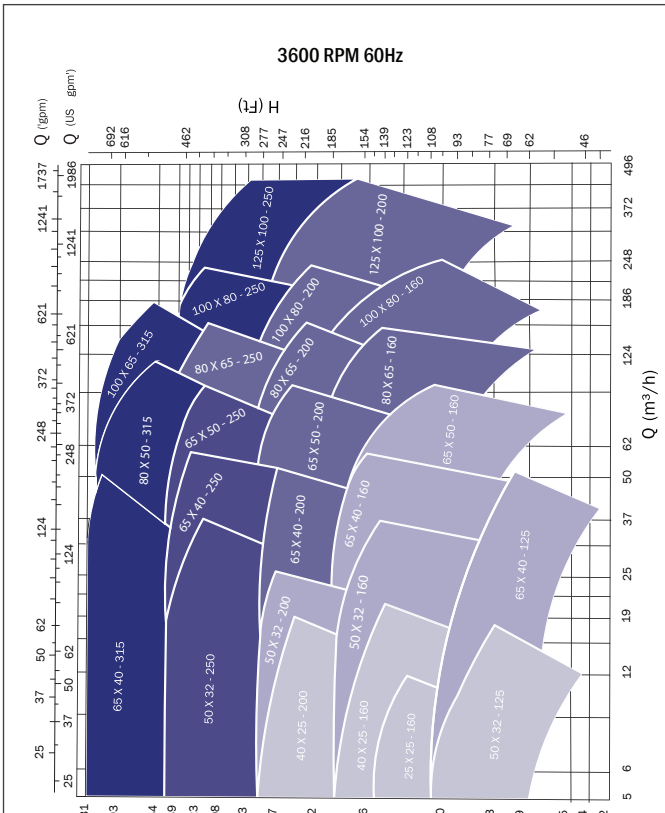

BEARING BRACKETS :	T9A	T9	T10	T10A	T11	T13

AURO

WORKS: 104/5/6, G.I.D.C., Palej - 32220. Dist. Bharuch, Gujarat, India
OFFICE: 309 Nilamber Primero, Vasna - Bhayli road, Vadodara, Gujarat, India – 391410

: +91 92272-27768 | +91 88669-27768 | +91 97279-55542
: sales@auropumps.com : www.auropumps.com

ISO 9001:2015