AURO PUMPS PVT.LTD.

Estb. 1984 in Technology Transfer from Pompe Vergani SpA of Italy

ACC

HORIZONTAL END SUCTION PUMPS

ACC PUMPS

ACC series pumps are centrifugal, single stage end suction pumps with over 39 different model sizes which provide flexibility on a wide range of duty points to satisfy varied industry requirements. Due to the versatile design of these pumps they are used across a wide spectrum of industries from water treatment to fertilizers & chemicals to nuclear applications.

The back pull-out design ensures reduced maintenance downtime and costs while a sturdy bearing and shaft assembly ensures longer operating life of the pump. These pumps are in accordance with ISO2858, ISO 5199 and DIN 24256 standards.

DESIGN FEATURES

- **Design:** centrifugal, horizontal single stage
- **Impeller:** closed, semi-open or open
- **Bearing lubrication:** oil or grease lubricated
- **Shaft sealing:** : gland packing, single/double mechanical seal, or Magnetic sealing
- **Heating jacket:** provided on request
- **Nozzle orientation:** horizontal end suction & radially upward discharge

TECHNICAL DETAILS

CAPACITY	*upto 1000 m^3/hour - higher flow rate provided on request*
HEAD	*upto 160 m*
SIZE	*25 to 250mm*
TEMPERATURE	*-40°C to +400°C*
VISCOSITY	*upto 500cP*
OPERATING FREQUENCY	*50Hz and 60Hz*
MATERIAL OF CONSTRUCTION	*Cast Iron, Cast Steel, WCB, WC6, WC9, CF8/CF3 (SS304/304L), CF8M/CF3M (SS316/316L), SS310, Bronze, Alloy-20, CD4MCu, CA6NM, Super Duplex Steel, Inconel, Monel, Nickel CZ-100, Hastelloy C276*

SIGNIFICANT FEATURES

1. Shaft sealing flexibility is a big advantage to the customer's using ACC pumps. Shaft sealing variants are -
   - Gland packing
   - Mechanical seal: single or double acting mechanical sealing systems with external lubrication
   - Special mechanical seals for handling solids laden liquids with external flushing
   - Magnetic drive sealing
2. A radial impeller with closed, semi-open or open type design allows the ACC pumps to handle a vast range of liquids and industry needs.
3. Heating or cooling jackets can be provided for handling crystalizing liquids.
4. Replaceable wear rings provide extended wear protection and longer service life - standard and optional, dependent on selected model.
5. Easy maintenance with the back pull-out design allows the hydraulic part to be removed without having to remove the pump body from the plant pipes.

APPLICATIONS

ORGANIC AND INORGANIC CHEMICALS	ACIDS AND CORROSIVE CHEMICALS	SOLVENT, HYDROCARBONS AND PETROCHEMICALS
CHLOROALKALI AND CAUSTIC SODA	SULPHURIC ACID AND MOLTEN SULFUR	BITUMEN AND COAL-TAR
WASTE WATER TREATMENT AND EFFLUENT TREATMENT PLANTS	HEAT TREATMENT FURNACES AND COOLING TOWERS	STEEL PRODUCTION AND PROCESSING
POWER PLANTS AND MINING	FERTILIZER INDUSTRY	NUCLEAR POWER

ACC VARIANTS

ACCRL RUBBER-LINED PUMPS

Excellent for pumping corrosive, erosive and abrasive liquids which cannot be handled by the standard ACC pump, ACCRL Rubber-lined pumps offer a robust solution for the most challenging applications.

CAPACITY	*upto 800 m^3/hour*
HEAD	*upto 60 m*
SIZE	*32 to 250 mm*
TEMPERATURE	*20°C to +100°C*
SOLIDS SIZE	*upto 20mm dependent on the size of the selected model*
OPERATING FREQUENCY	*50Hz and 60Hz*

ACM CLOSE-COUPLED PUMPS

Heavy duty industrial grade ACM close-coupled pumps are is suitable for handling the challenging demands of industrial applications. These pumps are supplied in a variety of materials and come fitted with a mechanical seal.

CAPACITY	*upto 800 m^3/hour*
HEAD	*upto 90 m*
SIZE	*25 to 250 mm*
TEMPERATURE	*20°C to +100°C*
MECHANICAL SEAL	*Single or double acting mechanical seal with internal or external lubrication*
OPERATING FREQUENCY	*50Hz and 60Hz*
MATERIAL OF CONSTRUCTION	*WCB, CF8/CF3 (SS304/304L), CF8M/CF3M (SS316/316L), SS310, Bronze, Alloy-20, CD4MCu, CA6NM, Super Duplex Steel, Inconel, Hastelloy C276*

ACVI VERTICAL INLINE PUMPS

ACVI heavy duty industrial grade vertical in-line pumps are suitable for handling a vast range of industrial applications. ACVI pumps are used as booster pumps, applications with limited installation space or harsh pumping conditions. A removable suction bend allows for easier maintenance and reduced down time.

CAPACITY	*upto 800 m^3/hour*
HEAD	*upto 90 m*
SIZE	*25 to 200 mm*
TEMPERATURE	*20°C to + 200°C*
MECHANICAL SEAL	*Single or double acting mechanical seal with internal or external lubrication.*
OPERATING FREQUENCY	*50Hz and 60Hz*
MATERIAL OF CONSTRUCTION	*CI, WCB, CF8/CF3 (SS304/304L), CF8M/CF3M (SS316/316L), Bronze, Alloy-20, CD4MCu, CA6NM, Super Duplex Steel, Inconel, Hastelloy C276.*
Heating jacket around the volute assembly can be provided if required.	

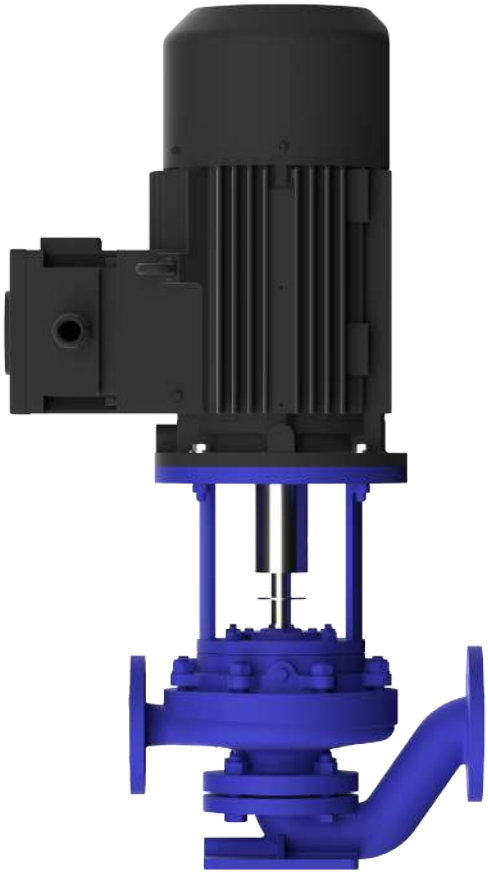

DIMENSION CHART

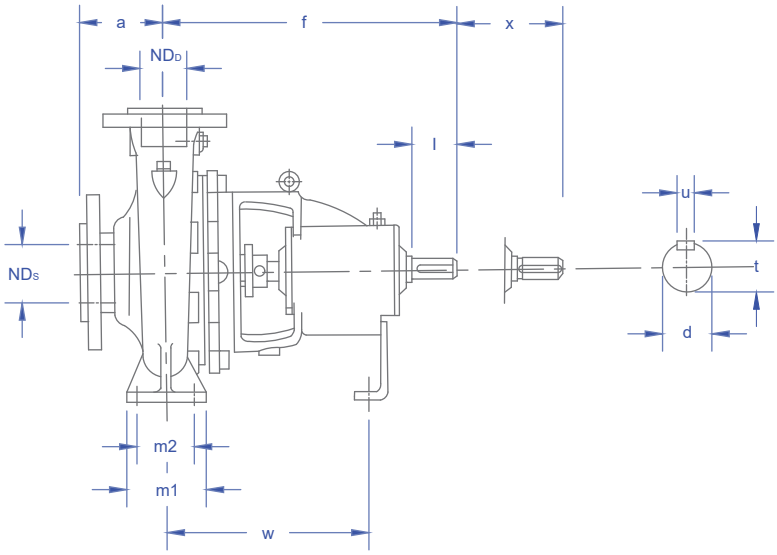

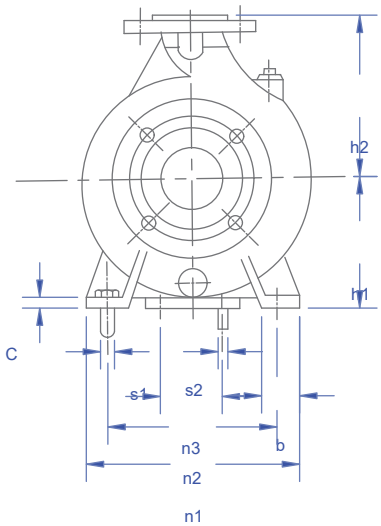

OVERALL DIMENSIONS																									
TYPE	PUMP					SUPPORT FOOT										SHAFTEND				CONNECTIONS					
ND_S X ND_D - ND_I	A	F	H1	H2	X	B	M1	M2	N1	N2	N3	W	C	S1	S2	D	L	U	T	D	E	G	P	R	Z
25 X 25 - 160	80	320	120	140	120	40	40	-	200	170	110	220	11	M12	M12	24	50	8	27	-	1/4"	3/8"	1/4"	-	3/8"
40 X 25 - 160	80	320	120	140	120	40	40	-	200	170	110	220	11	M12	M12	24	50	8	27	-	1/4"	3/8"	1/4"	-	3/8"
40 X 25 - 200	80	320	140	165	120	40	50	-	200	190	110	220	12	M12	M12	24	50	8	27	-	1/4"	3/8"	1/4"	-	3/8"
50 X 32 - 125	80	320	112	140	120	50	50	-	190	160	110	220	12	M12	M12	24	50	8	27	-	1/4"	3/8"	1/4"	-	3/8"
50 X 32 - 160	80	360	132	160	140	50	100	70	240	190	110	260	15	M12	M12	24	50	8	27	1/2"	1/4"	3/8"	1/4"	3/8"	3/8"
50 X 32 - 200	80	360	160	180	140	50	100	70	240	190	110	260	15	M12	M12	24	50	8	27	1/2"	1/4"	3/8"	1/4"	3/8"	3/8"
50 X 32 - 250	100	470	180	225	140	65	125	95	320	250	110	340	15	M12	M12	32	80	10	35	1/2"	1/4"	3/8"	1/4"	3/8"	3/8"
65 X 40 - 125	80	320	112	140	120	50	50	-	190	160	110	220	12	M12	M12	24	50	8	27	-	1/4"	3/8"	1/4"	-	3/8"
65 X 40 - 160	80	360	132	160	140	50	100	70	240	190	110	260	15	M12	M12	24	50	8	27	1/2"	1/4"	3/8"	1/4"	3/8"	3/8"
65 X 40 - 200	100	360	160	180	140	50	100	70	265	212	110	260	15	M12	M12	24	50	8	27	1/2"	1/4"	3/8"	1/4"	3/8"	3/8"
65 X 40 - 250	100	470	180	225	140	65	125	95	320	250	110	340	17	M12	M12	32	80	10	35	1/2"	1/4"	3/8"	1/4"	3/8"	3/8"
65 X 40 - 315	125	470	225	280	100	65	125	95	345	280	110	340	17	M16	M12	42	80	12	45	1/2"	1/4"	3/8"	1/4"	3/8"	3/8"
65 X 50 - 160	100	360	160	180	140	50	100	70	265	212	110	260	15	M12	M12	24	50	8	27	1/2"	1/4"	3/8"	1/4"	3/8"	3/8"
65 X 50 - 200	100	360	160	200	140	50	100	70	265	212	110	260	15	M12	M12	24	50	8	27	1/2"	1/4"	3/8"	1/4"	3/8"	3/8"
65 X 50 - 250	100	470	180	225	140	65	125	95	320	250	110	340	17	M12	M12	32	80	10	35	1/2"	1/4"	3/8"	1/4"	3/8"	3/8"
80 X 65 - 160	100	360	160	200	140	65	125	95	280	212	110	260	17	M12	M12	24	50	8	27	1/2"	1/4"	3/8"	1/4"	3/8"	3/8"
80 X 65 - 200	100	470	180	225	140	65	125	95	320	255	110	340	17	M12	M12	32	80	10	35	1/2"	1/4"	3/8"	1/4"	3/8"	3/8"
80 X 65 - 250	100	470	200	250	140	80	160	120	360	280	110	340	18	M16	M12	42	80	12	45	1/2"	1/4"	3/8"	1/4"	3/8"	3/8"
80 X 50 - 315	125	470	225	280	140	65	125	95	345	280	110	340	18	M16	M12	42	80	12	45	1/2"	1/4"	3/8"	1/4"	3/8"	3/8"
100 X 80 - 160	125	470	180	225	140	65	125	95	320	250	110	340	17	M12	M12	32	80	10	35	1/2"	3/8"	3/8"	1/4"	3/8"	3/8"
100 X 80 - 200	125	470	180	250	140	65	125	95	345	280	110	340	17	M12	M12	42	80	12	45	1/2"	3/8"	3/8"	1/4"	3/8"	3/8"
100 X 80 - 250	125	470	200	280	140	80	160	120	400	315	110	340	18	M16	M12	42	80	12	45	1/2"	3/8"	3/8"	1/4"	3/8"	3/8"
100 X 65 - 315	125	470	225	280	140	80	160	120	400	315	110	340	18	M16	M12	42	80	12	45	1/2"	1/4"	3/8"	1/4"	3/8"	3/8"
100 X 80 - 400	125	670	280	355	140	100	160	120	435	355	110	500	20	M20	M12	48	110	14	52	1/2"	1/4"	3/8"	1/4"	3/8"	3/8"
125 X 100 - 200	125	470	200	280	140	80	160	120	360	280	110	340	18	M16	M12	42	80	12	45	1/2"	1/2"	1/4"	1/4"	3/8"	3/8"
125 X 100 - 250	140	470	225	280	140	80	160	120	400	315	110	340	18	M16	M12	42	80	12	45	1/2"	1/2"	1/4"	1/4"	3/8"	3/8"
125 X 80 - 315	125	470	250	315	140	80	160	120	400	315	110	340	18	M16	M12	42	80	12	45	1/2"	3/8"	3/8"	1/4"	3/8"	3/8"
125 X 100 - 315	140	470	250	315	140	80	160	120	400	315	110	340	18	M20	M12	42	80	12	45	1/2"	1/2"	1/4"	1/4"	3/8"	3/8"
125 X 100 - 400	140	670	280	355	140	100	200	150	500	400	110	500	20	M20	M12	48	110	14	52	1/2"	1/2"	1/4"	1/4"	3/8"	1/2"
150 X 125 - 250	140	470	250	355	140	80	160	120	400	315	110	340	18	M16	M12	42	80	12	45	1/2"	1/2"	1/4"	1/4"	3/8"	3/8"
150 X 125 - 315	140	470	280	355	140	80	200	150	500	400	110	340	20	M20	M12	42	80	12	45	1/2"	1/2"	1/4"	1/4"	3/8"	3/8"
150 X 125 - 400	140	470	315	400	140	100	200	150	550	400	110	500	20	M20	M12	48	110	14	52	1/2"	1/2"	1/4"	1/4"	3/8"	1/2"
200 X 150 - 250	160	470	280	375	180	100	200	150	500	400	110	340	20	M20	M12	42	80	12	45	1/2"	1/2"	1/4"	1/4"	1/2"	3/8"
200 X 150 - 315	160	670	315	400	180	100	200	150	550	450	110	500	20	M20	M12	48	110	14	52	-	1/2"	1/4"	1/4"	1/2"	1/2"
200 X 150 - 400	160	670	315	450	180	100	200	150	550	450	110	500	20	M20	M12	48	110	14	52	-	1/2"	1/4"	1/4"	1/2"	1/2"
250 X 200 - 315	200	670	355	450	180	100	200	150	550	450	110	500	20	M20	M12	48	110	14	52	-	1/2"	1/4"	1/4"	1/2"	1/2"
250 X 200 - 400	200	670	355	500	180	100	200	150	550	450	110	500	20	M20	M12	48	110	14	52	-	1/2"	1/4"	1/4"	1/2"	1/2"
300 X 250 - 315	220	691	355	520	180	150	250	200	660	510	110	525	22	M24	M12	48	110	14	52	-	1/2"	1/4"	1/4"	1/2"	1/2"
300 X 250 - 400	220	682	400	560	180	150	250	200	660	510	110	516	22	M24	M12	48	110	14	52	-	1/2"	1/4"	1/4"	1/2"	1/2"

ACC FAMILY CURVES

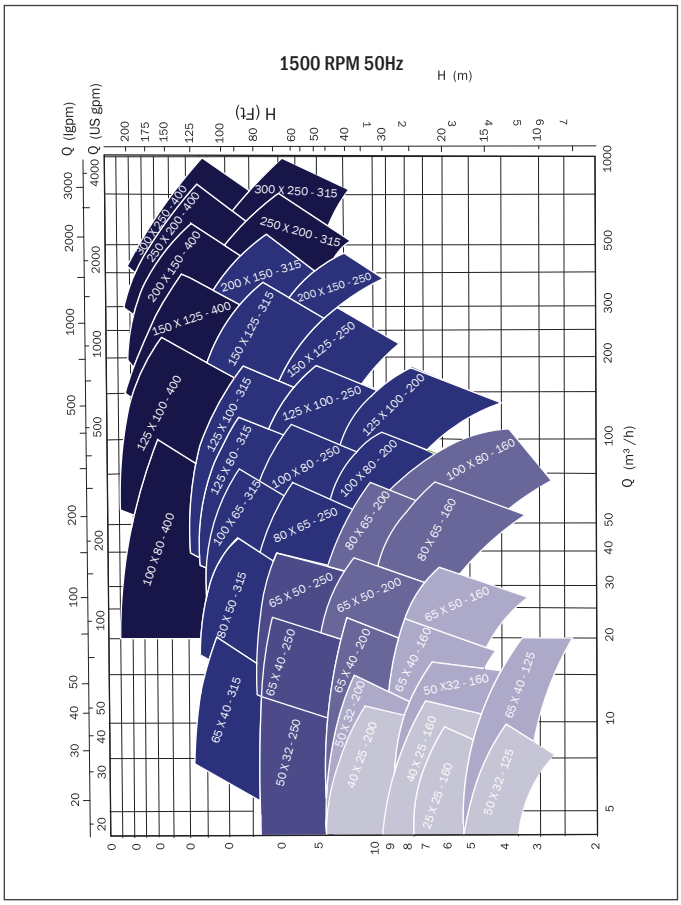

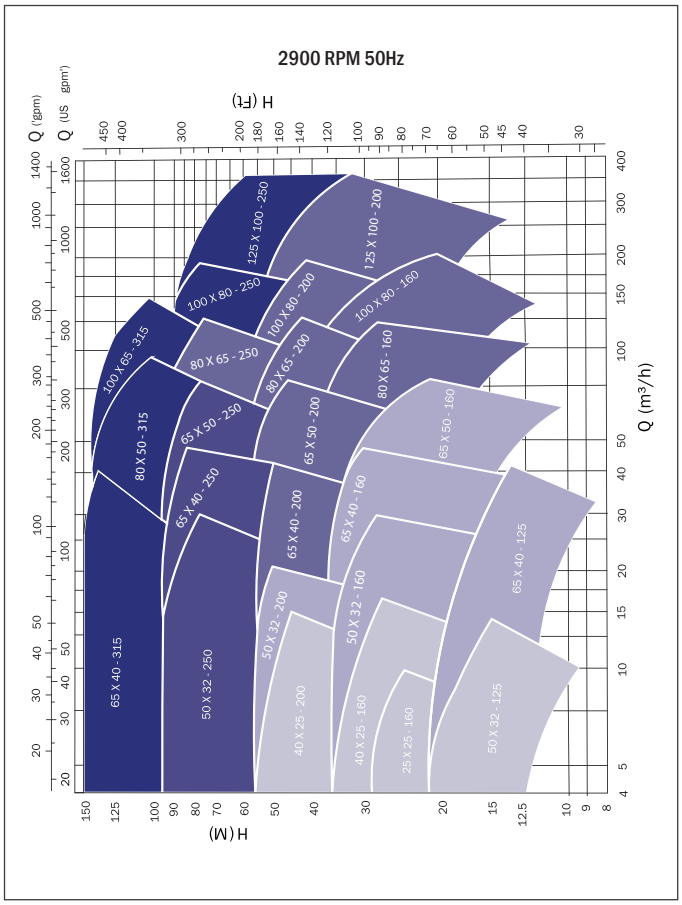

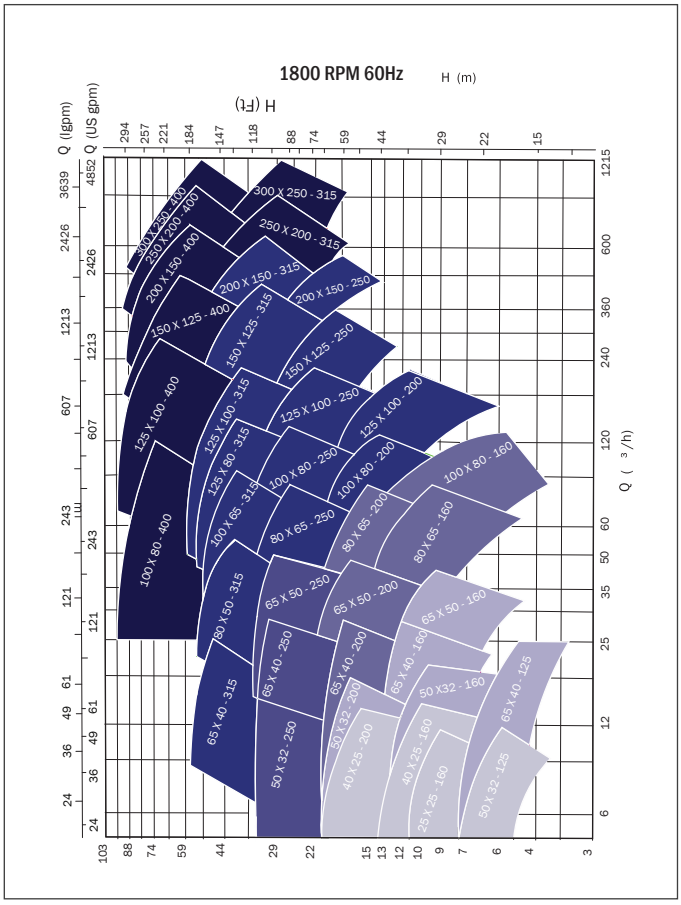

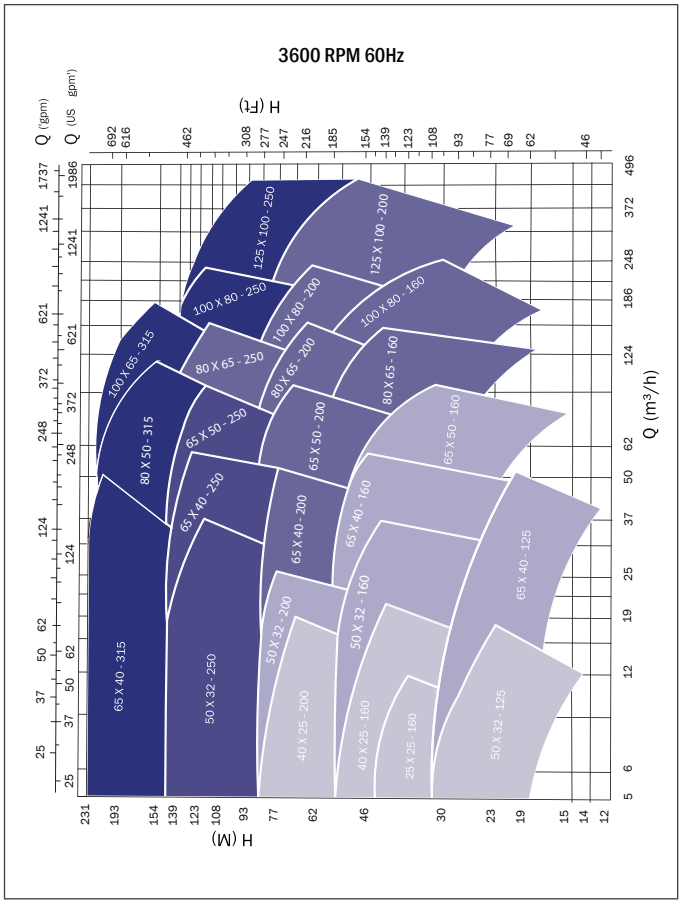

BEARING BRACKETS :	T9A	T9	T10	T10A	T11	T13

AURO

WORKS: 104/5/6, G.I.D.C., Palej - 32220. Dist. Bharuch, Gujarat, India
OFFICE: 309 Nilamber Primero, Vasna - Bhayli road, Vadodara, Gujarat, India – 391410

: +91 92272-27768 | +91 88669-27768 | +91 97279-55542
: sales@auropumps.com : www.auropumps.com

ISO 9001:2015