Q.11 – Q.35 Carry ONE mark Each

Q.11 Consider a computer with a 4 MHz processor. Its DMA controller can transfer 8 bytes in 1 cycle from a device to main memory through cycle stealing at regular intervals. Which one of the following is the data transfer rate (*in bits per second*) of the DMA controller if 1% of the processor cycles are used for DMA?

(A) 2,56,000

(B) 3,200

(C) 25,60,000

(D) 32,000

Q.12 Let p and q be the following propositions:

p: Fail grade can be given.

q: Student scores more than 50% marks.

Consider the statement: "*Fail grade cannot be given when student scores more than 50% marks.*"

Which one of the following is the CORRECT representation of the above statement in propositional logic?

(A) $q \rightarrow \neg p$

(B) $q \rightarrow p$

(C) $p \rightarrow q$

(D) $\neg p \rightarrow q$

Q.13 Consider the following C program. Assume parameters to a function are evaluated from *right to left*.

```
#include <stdio.h>

int g(int p) { printf("%d", p); return p; }
int h(int q) { printf("%d", q); return q; }

void f(int x, int y) {
  g(x);
  h(y);
}

int main() {
  f(g(10),h(20));
}
```

Which one of the following options is the CORRECT output of the above C program?

(A) 20101020

(B) 10202010

(C) 20102010

(D) 10201020

Q.21 Consider the following two sets:

Set *X*	**Set *Y***
P. Lexical Analyzer	1. Abstract Syntax Tree
Q. Syntax Analyzer	2. Token
R. Intermediate Code Generator	3. Parse Tree
S. Code Optimizer	4. Constant Folding

Which one of the following options is the CORRECT match from **Set *X*** to **Set *Y*** ?

(A) P – 4; Q – 1; R – 3; S – 2

(B) P – 2; Q – 3; R – 1; S – 4

(C) P – 2; Q – 1; R – 3; S – 4

(D) P – 4; Q – 3; R – 2; S – 1

GATE 2024

Q.22 Which one of the following regular expressions is equivalent to the language accepted by the DFA given below?

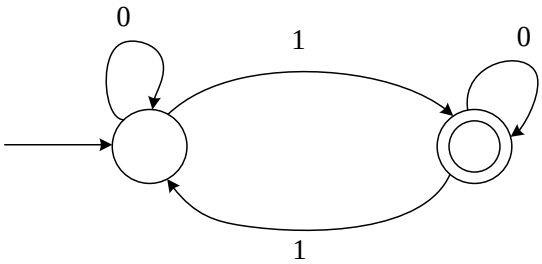

(A) $0^*1(0 + 10^*1)^*$

(B) $0^*(10^*11)^*0^*$

(C) $0^*1(010^*1)^*0^*$

(D) $0(1 + 0^*10^*1)^*0^*$

GATE 2024

Q.23 Node X has a TCP connection open to node Y. The packets from X to Y go through an intermediate IP router R. Ethernet switch S is the first switch on the network path between X and R. Consider a packet sent from X to Y over this connection.

Which of the following statements is/are TRUE about the destination IP and MAC addresses on this packet at the time it leaves X?

(A) The destination IP address is the IP address of R

(B) The destination IP address is the IP address of Y

(C) The destination MAC address is the MAC address of S

(D) The destination MAC address is the MAC address of Y

Q.24 Which of the following tasks is/are the responsibility/responsibilities of the memory management unit (MMU) in a system with paging-based memory management?

(A) Allocate a new page table for a newly created process

(B) Translate a virtual address to a physical address using the page table

(C) Raise a trap when a virtual address is not found in the page table

(D) Raise a trap when a process tries to write to a page marked with read-only permission in the page table

Q.41 Let M be the 5-state NFA with ϵ-transitions shown in the diagram below.

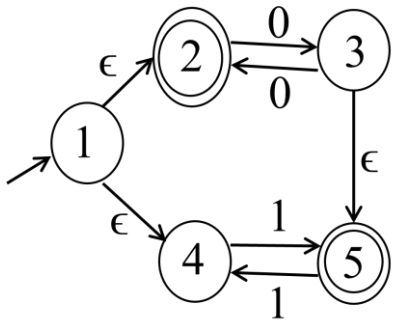

Which one of the following regular expressions represents the language accepted by M ?

(A) $(00)^* + 1(11)^*$

(B) $0^* + (1 + 0(00)^*)(11)^*$

(C) $(00)^* + (1 + (00)^*)(11)^*$

(D) $0^+ + 1(11)^* + 0(11)^*$

Q.43 Consider the following expression: $x[i] = (p + r) * -s[i] + u/w$. The following sequence shows the list of triples representing the given expression, with entries missing for triples (1), (3), and (6).

(0)	$+$	p	r
(1)			
(2)	uminus	(1)	
(3)			
(4)	$/$	u	w
(5)	$+$	(3)	(4)
(6)			
(7)	$=$	(6)	(5)

Which one of the following options fills in the missing entries CORRECTLY?

(A) (1) =[] s i (3) * (0) (2) (6) []= x i

(B) (1) []= s i (3) – (0) (2) (6) =[] x (5)

(C) (1) =[] s i (3) * (0) (2) (6) []= x (5)

(D) (1) []= s i (3) – (0) (2) (6) =[] x i

Q.50 Consider 4-variable functions *f1*, *f2*, *f3*, *f4* expressed in sum-of-minterms form as given below.

$f1 = \sum(0,2,3,5,7,8,11,13)$

$f2 = \sum(1,3,5,7,11,13,15)$

$f3 = \sum(0,1,4,11)$

$f4 = \sum(0,2,6,13)$

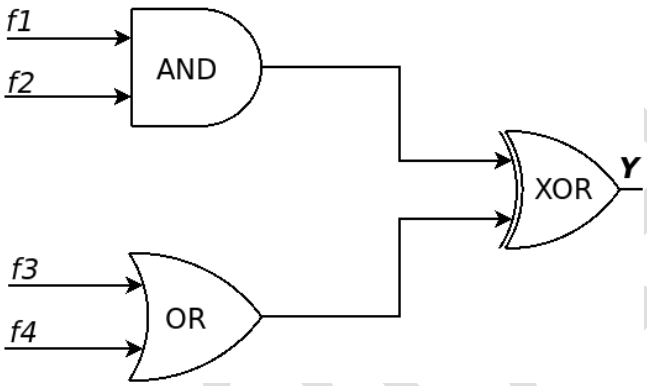

With respect to the circuit given above, which of the following options is/are CORRECT?

(A) $\boldsymbol{Y} = \sum(0,1,2,11,13)$

(B) $\boldsymbol{Y} = \Pi(3,4,5,6,7,8,9,10,12,14,15)$

(C) $\boldsymbol{Y} = \sum(0,1,2,3,4,5,6,7)$

(D) $\boldsymbol{Y} = \Pi(8,9,10,11,12,13,14,15)$

Q.51 Let G be an undirected connected graph in which every edge has a positive integer weight. Suppose that every spanning tree in G has *even* weight. Which of the following statements is/are TRUE for *every* such graph G ?

(A) All edges in G have even weight

(B) All edges in G have even weight **OR** all edges in G have odd weight

(C) In each cycle C in G, all edges in C have even weight

(D) In each cycle C in G, either all edges in C have even weight **OR** all edges in C have odd weight

Q.52 Consider a context-free grammar G with the following 3 rules.

$$S \rightarrow aS,\ S \rightarrow aSbS,\ S \rightarrow c$$

Let $w \in L(G)$. Let $n_a(w),\ n_b(w),\ n_c(w)$ denote the number of times a, b, c occur in w, respectively. Which of the following statements is/are TRUE?

(A) $n_a(w) > n_b(w)$

(B) $n_a(w) > n_c(w) - 2$

(C) $n_c(w) = n_b(w) + 1$

(D) $n_c(w) = n_b(w) * 2$

Q.64 Consider a 32-bit system with 4 KB page size and page table entries of size 4 bytes each. Assume 1 KB = 2^{10} bytes. The OS uses a 2-level page table for memory management, with the page table containing an outer page directory and an inner page table. The OS allocates a page for the outer page directory upon process creation. The OS uses demand paging when allocating memory for the inner page table, i.e., a page of the inner page table is allocated only if it contains at least one valid page table entry.

An active process in this system accesses 2000 unique pages during its execution, and none of the pages are swapped out to disk. After it completes the page accesses, let X denote the minimum and Y denote the maximum number of pages across the two levels of the page table of the process.

The value of $X+Y$ is _____

Q.65 Consider the following augmented grammar, which is to be parsed with a SLR parser. The set of terminals is $\{a,b,c,d,\#,@\}$

$$S' \rightarrow S$$
$$S \rightarrow SS \mid Aa \mid bAc \mid Bc \mid bBa$$
$$A \rightarrow d\#$$
$$B \rightarrow @$$

Let $I_0 = CLOSURE(\{S' \rightarrow \bullet S\})$. The number of items in the set $GOTO(I_0,\ S)$ is _____