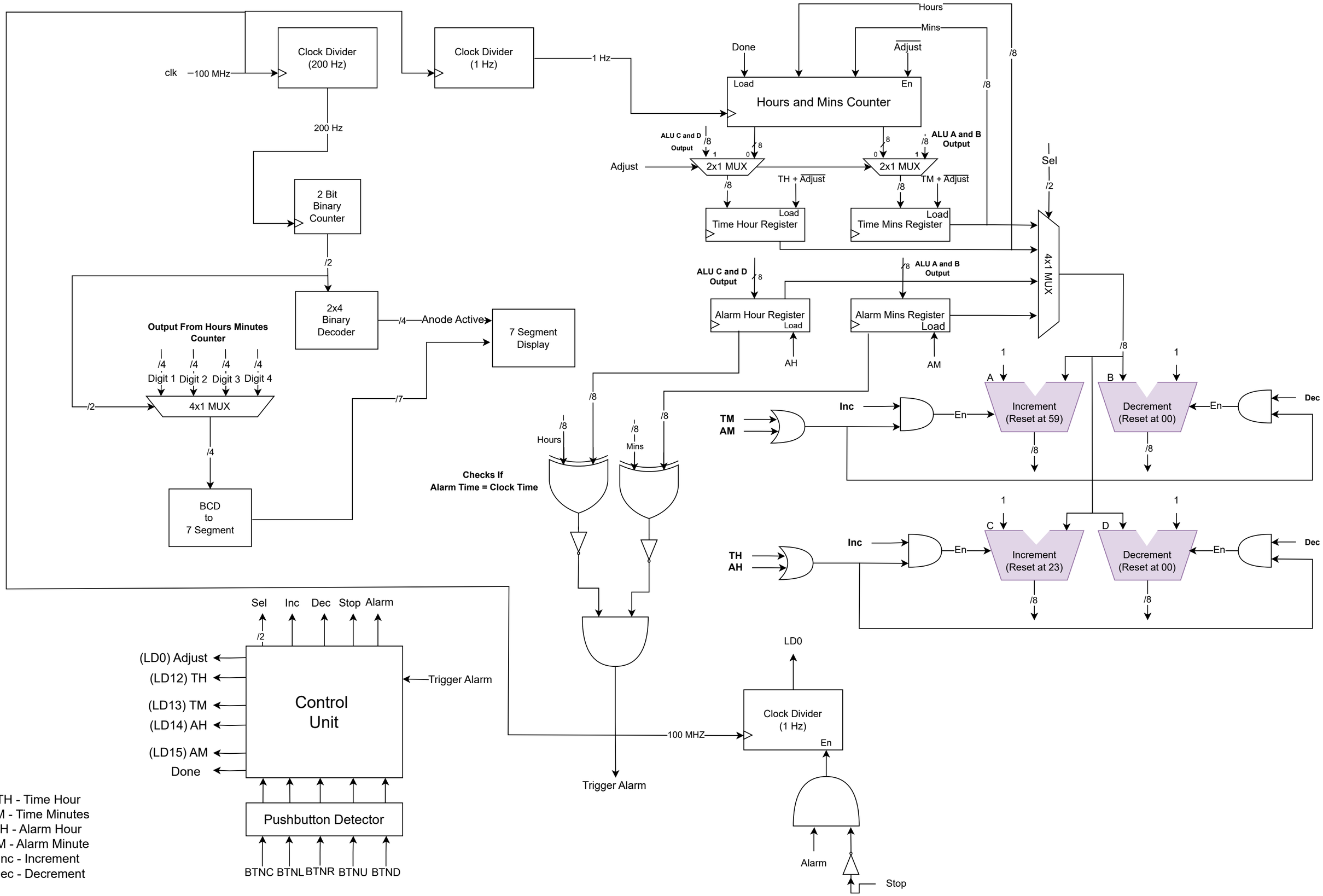

TH - Time Hour
TM - Time Minutes
AH - Alarm Hour
AM - Alarm Minute
Inc - Increment
Dec - Decrement

Kareem Elnaghy, Arwa Abdelkarim, Jana Elfeky