THIS DOCUMENT AND THE DATA DISCLOSED HEREIN OR HEREWITH IS THE PROPERTY OF ALTIUM LIMITED AND MAY BE FREELY DISTRIBUTED IN WHOLE. NO RIGHTS ARE RESERVED OR EXPRESS OR IMPLIED WARANTEE GIVEN.

REVISION	DESCRIPTION	DATE	APPROVED

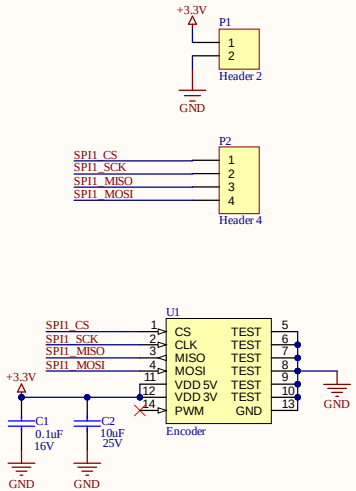

APPROVALS	DATE
ENG:	
DSN:	
CHK:	
REFERENCE DOCUMENTS	
BOM:	
ASSY DWG:	
FAB DWG:	
PCB DWG:	

PROJECT

Altium

PROJECT REVISION: | DOCUMENT REVISION: Unknown revision | DESIGN ITEM:

TITLE

Наименование

SIZE	CAGE CODE	DWG NO.	REV
A3			

SCALE: | FILE NAME Encoder.SchDoc | SHEET 1 OF 1

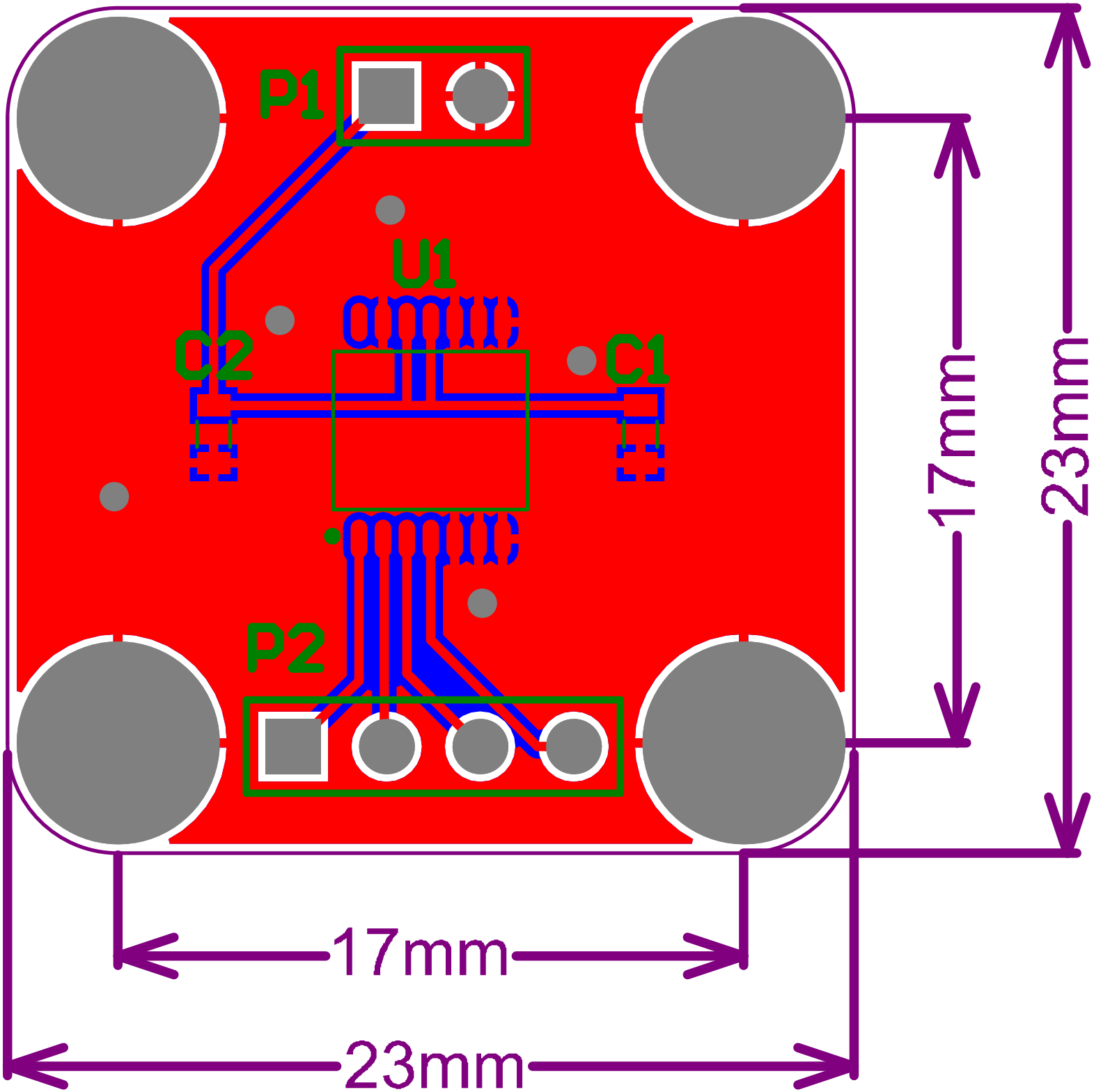
P1
U1
C2
C1
P2
17mm
23mm
17mm
23mm