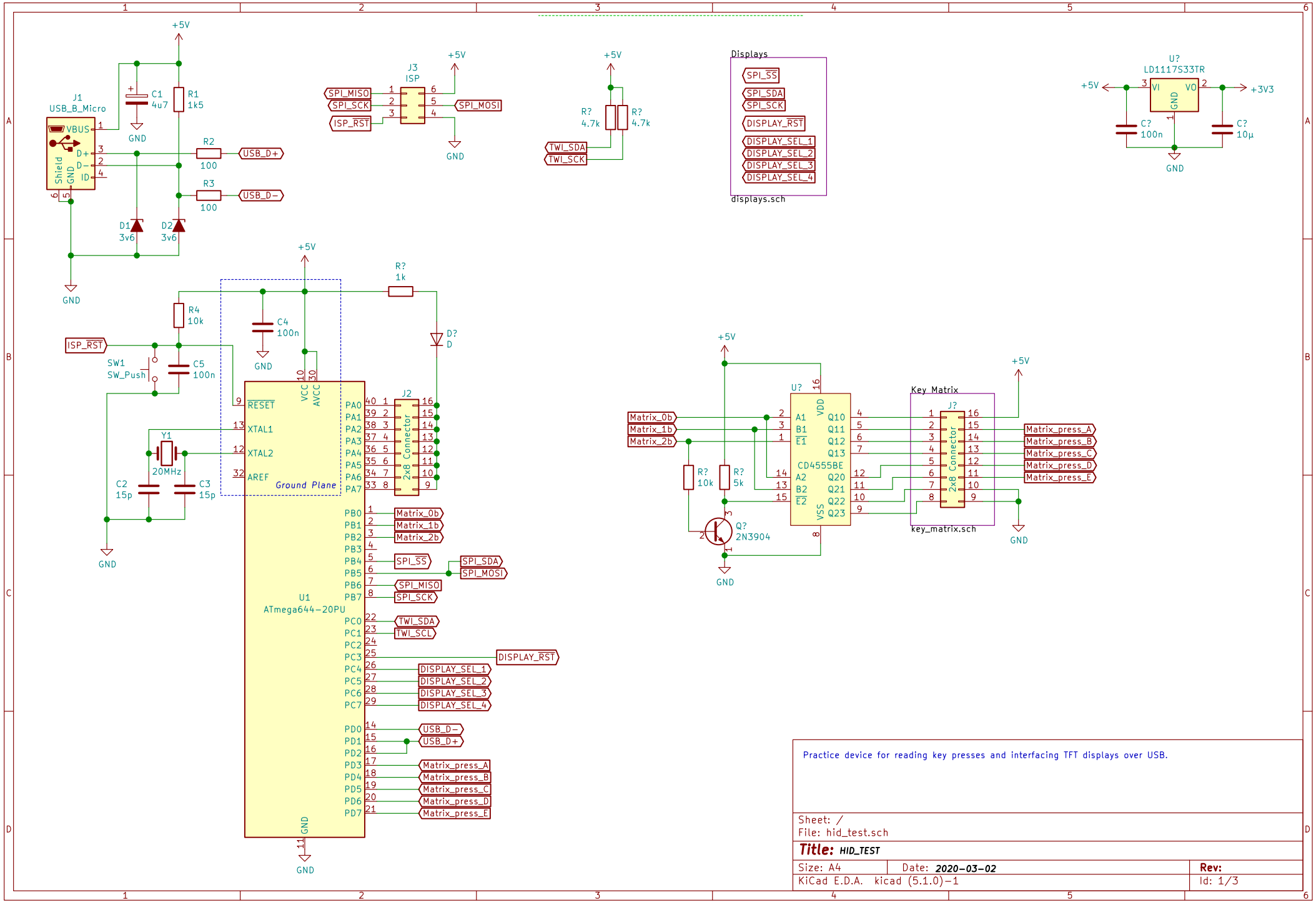

Practice device for reading key presses and interfacing TFT displays over USB.

Sheet: /
File: hid_test.sch

Title: *HID_TEST*

Size: A4	Date: *2020-03-02*	**Rev:**
KiCad E.D.A. kicad (5.1.0)-1		Id: 1/3

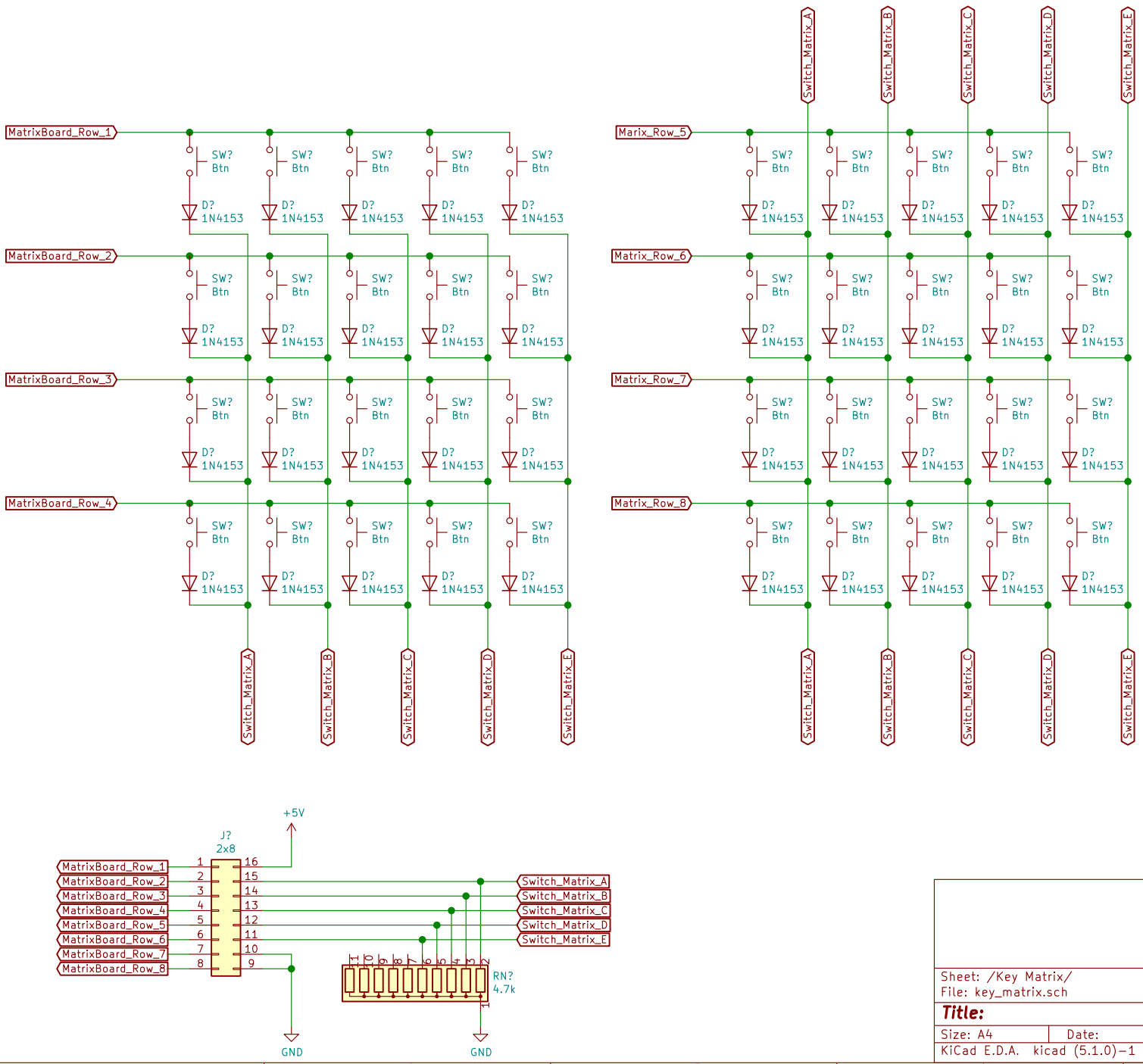

Sheet: /Key Matrix/
File: key_matrix.sch

Title:

Size: A4	Date:	**Rev:**
KiCad E.D.A. kicad (5.1.0)-1		Id: 2/3

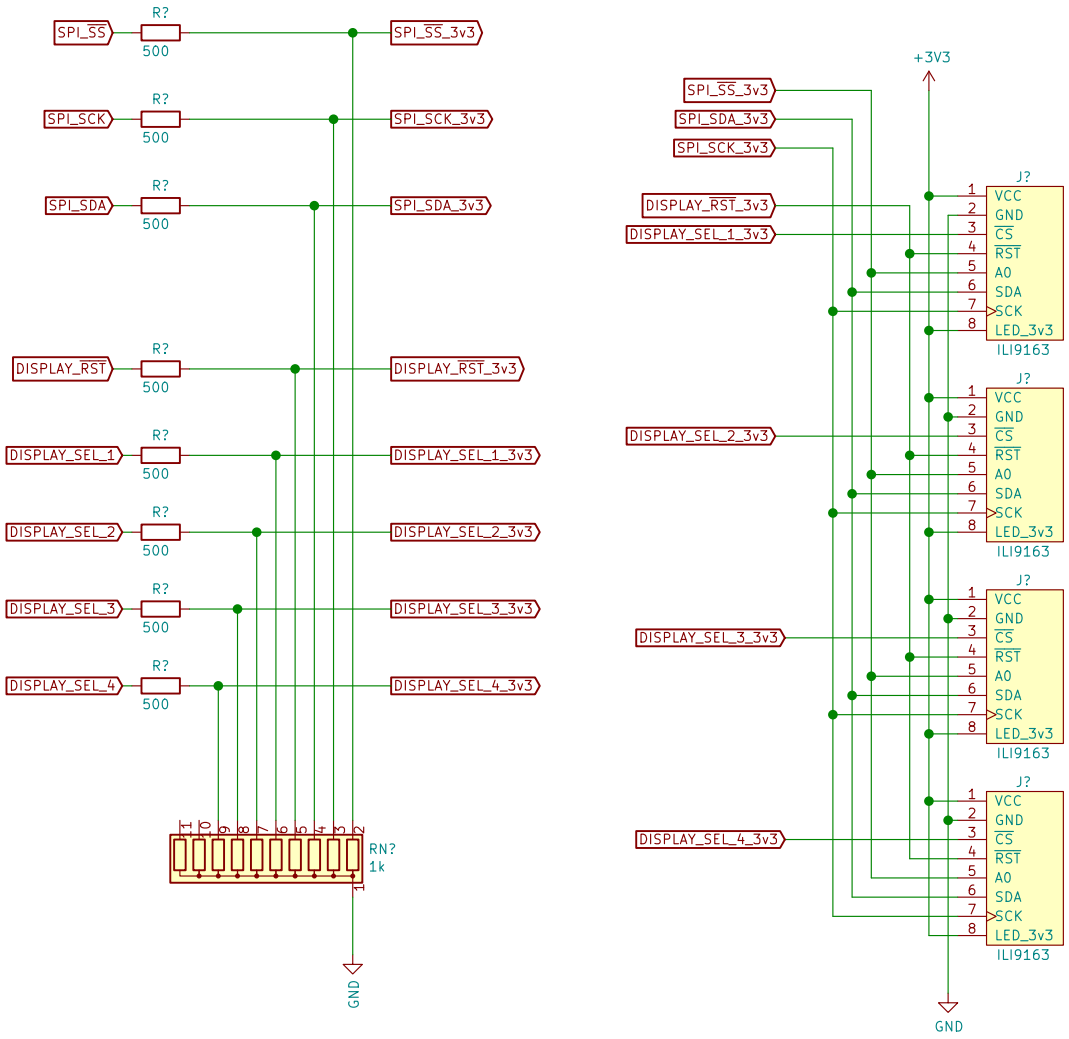

Sheet: /Displays/
File: displays.sch

Title:

Size: A4	Date:	Rev:
KiCad E.D.A. kicad (5.1.0)-1		Id: 3/3