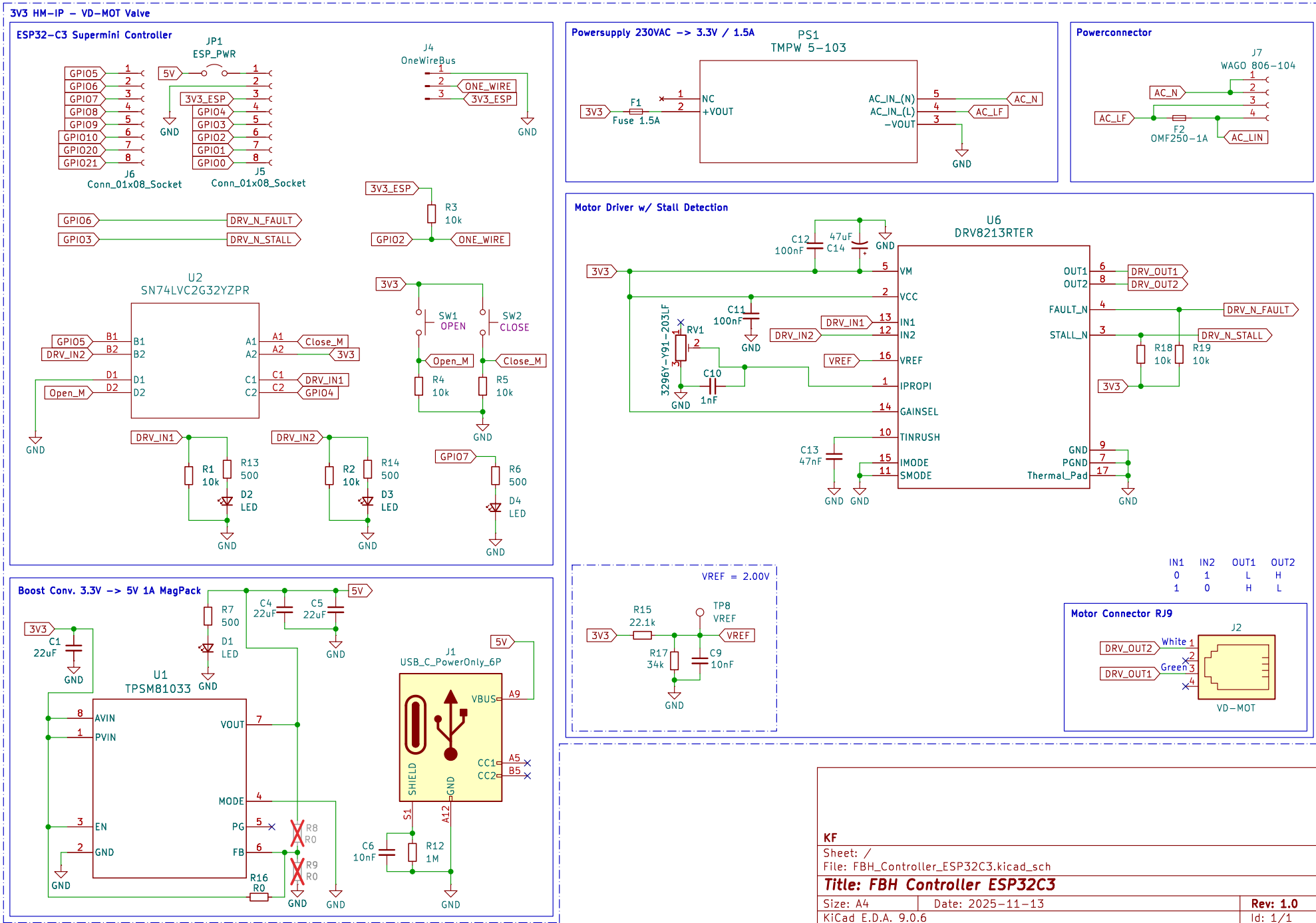
3V3 HM-IP - VD-MOT Valve
ESP32-C3 Supermini Controller
JP1
ESP_PWR
J4
OneWireBus
J6
Conn_01x08_Socket
J5
Conn_01x08_Socket
GPIO5
GPIO6
GPIO7
GPIO8
GPIO9
GPIO10
GPIO20
GPIO21
3V3_ESP
GPIO4
GPIO3
GPIO2
GPIO1
GPIO0
5V
GND
ONE_WIRE
DRV_N_FAULT
DRV_N_STALL
R3
10k
U2
SN74LVC2G32YZPR
Close_M
DRV_IN1
DRV_IN2
Open_M
SW1
OPEN
SW2
CLOSE
R4
10k
R5
10k
R1
10k
R13
500
D2
LED
R2
10k
R14
500
D3
LED
R6
500
D4
LED
Powersupply 230VAC -> 3.3V / 1.5A
PS1
TMPW 5-103
F1
Fuse 1.5A
NC
+VOUT
AC_IN_(N)
AC_IN_(L)
-VOUT
AC_N
AC_LF
Powerconnector
J7
WAGO 806-104
F2
OMF250-1A
AC_LIN
Motor Driver w/ Stall Detection
U6
DRV8213RTER
C12
100nF
C14
47uF
C11
100nF
RV1
3296Y-Y91-203LF
C10
1nF
C13
47nF
VM
VCC
IN1
IN2
VREF
IPROPI
GAINSEL
TINRUSH
IMODE
SMODE
OUT1
OUT2
FAULT_N
STALL_N
GND
PGND
Thermal_Pad
R18
10k
R19
10k
VREF = 2.00V
R15
22.1k
R17
34k
TP8
VREF
C9
10nF
IN1 IN2 OUT1 OUT2
0 1 L H
1 0 H L
Motor Connector RJ9
J2
White
Green
VD-MOT
Boost Conv. 3.3V -> 5V 1A MagPack
C1
22uF
R7
500
D1
LED
C4
22uF
C5
22uF
U1
TPSM81033
AVIN
PVIN
VOUT
MODE
EN
PG
FB
R8
R0
R9
R0
R16
R0
J1
USB_C_PowerOnly_6P
VBUS
A9
CC1
CC2
A5
B5
SHIELD
S1
A12
C6
10nF
R12
1M
KF
Sheet: /
File: FBH_Controller_ESP32C3.kicad_sch
Title: FBH Controller ESP32C3
Size: A4
Date: 2025-11-13
Rev: 1.0
KiCad E.D.A. 9.0.6
Id: 1/1