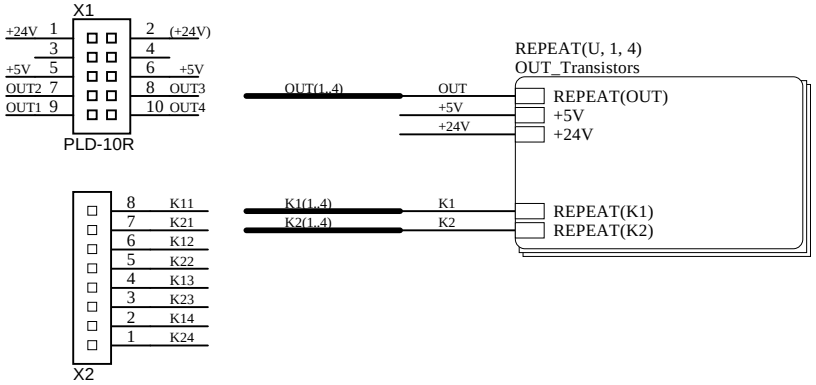

Title	**Common_Sheet.SchDoc**		
Size A4	Number		Revision
Date:	26.07.2016	Sheet of	
File:	U:\Altium\..\Common_Sheet.SchDoc	Drawn By:	