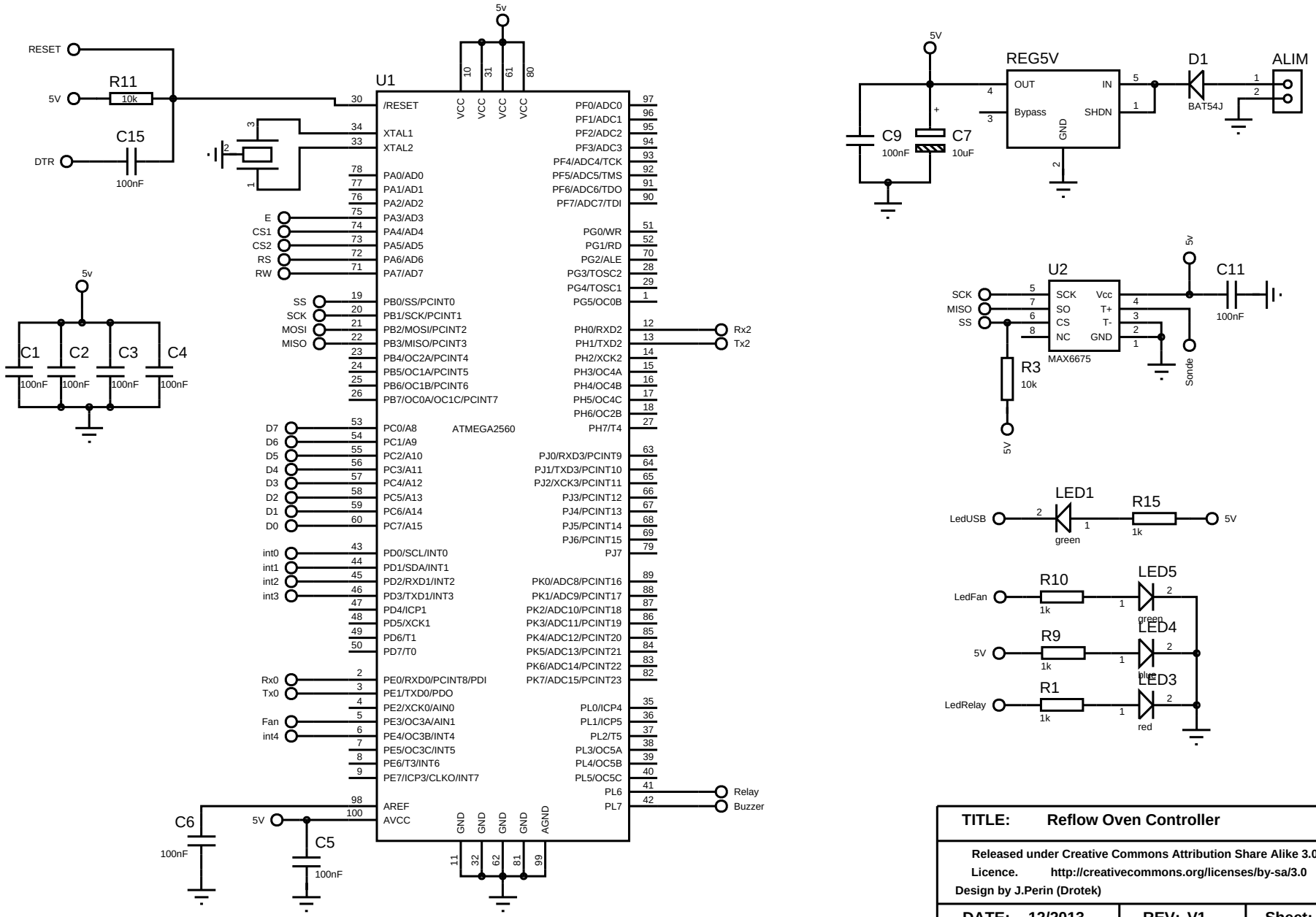

TITLE:	**Reflow Oven Controller**	
Released under Creative Commons Attribution Share Alike 3.0 Licence. http://creativecommons.org/licenses/by-sa/3.0		
Design by J.Perin (Drotek)		
DATE: 12/2013	**REV: V1**	**Sheet: 1/2**