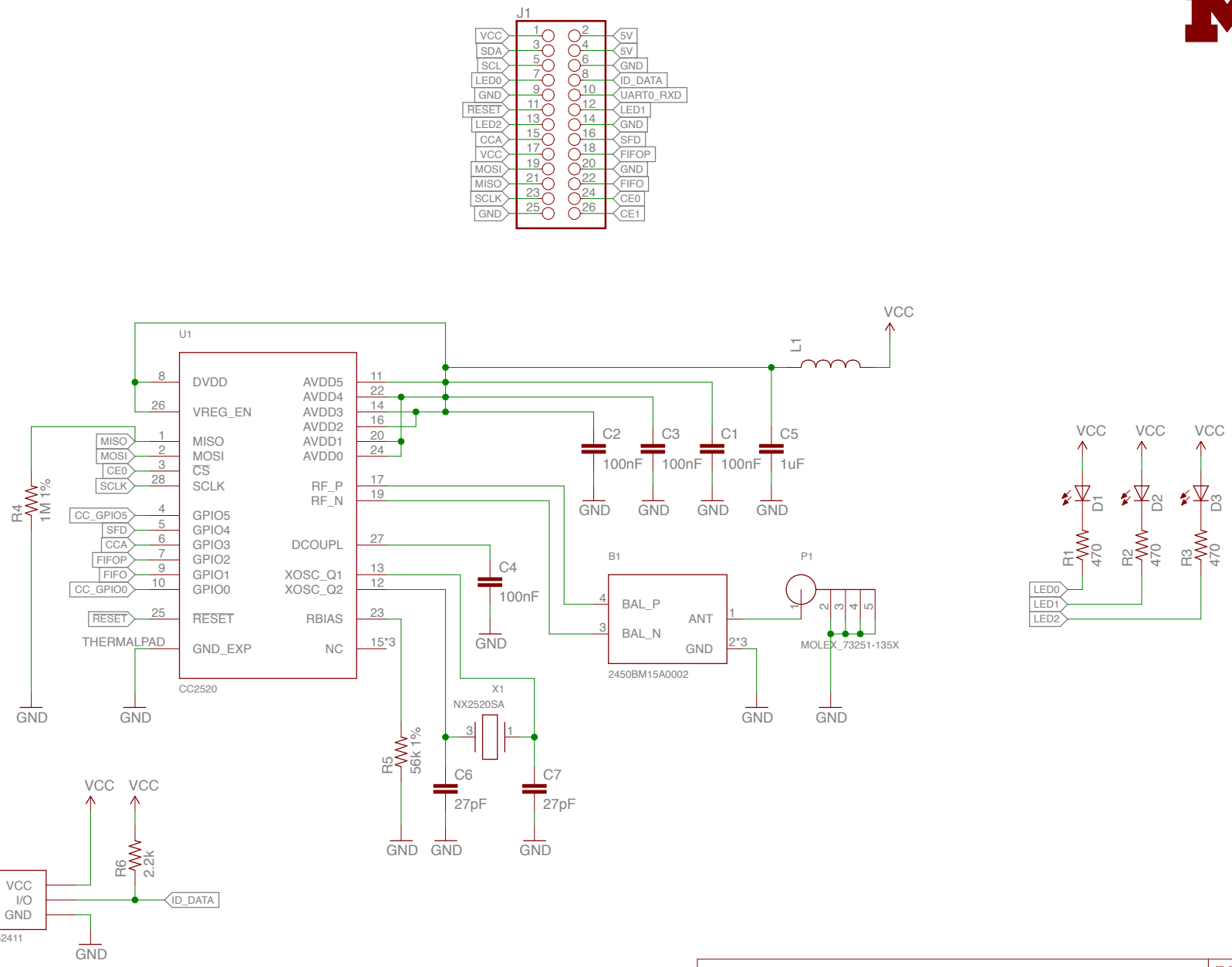

RPi + CC2520

REV: A

Date: 9/22/13 6:48 PM

Sheet: 1/1

Top and Bottom Layers

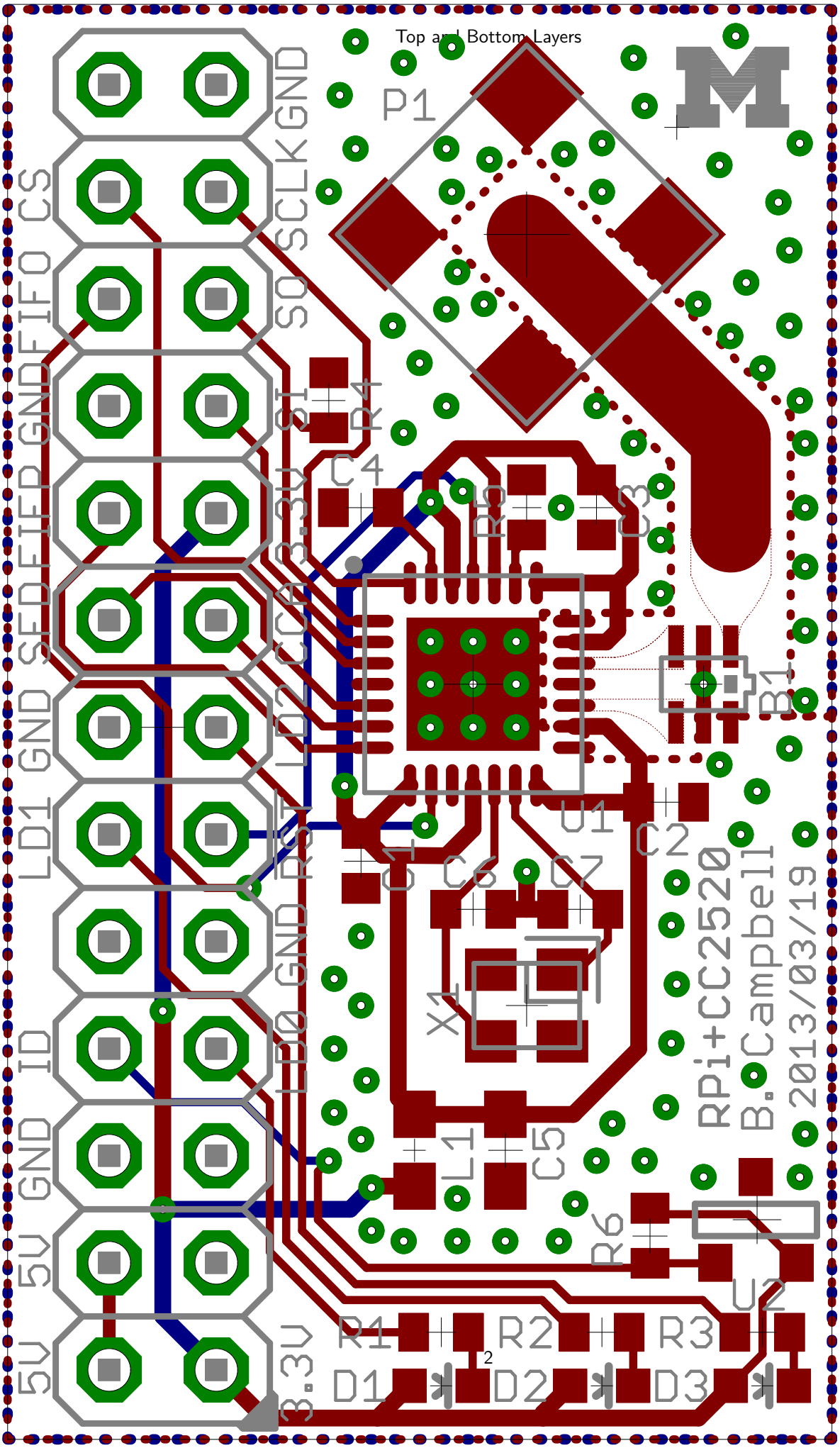

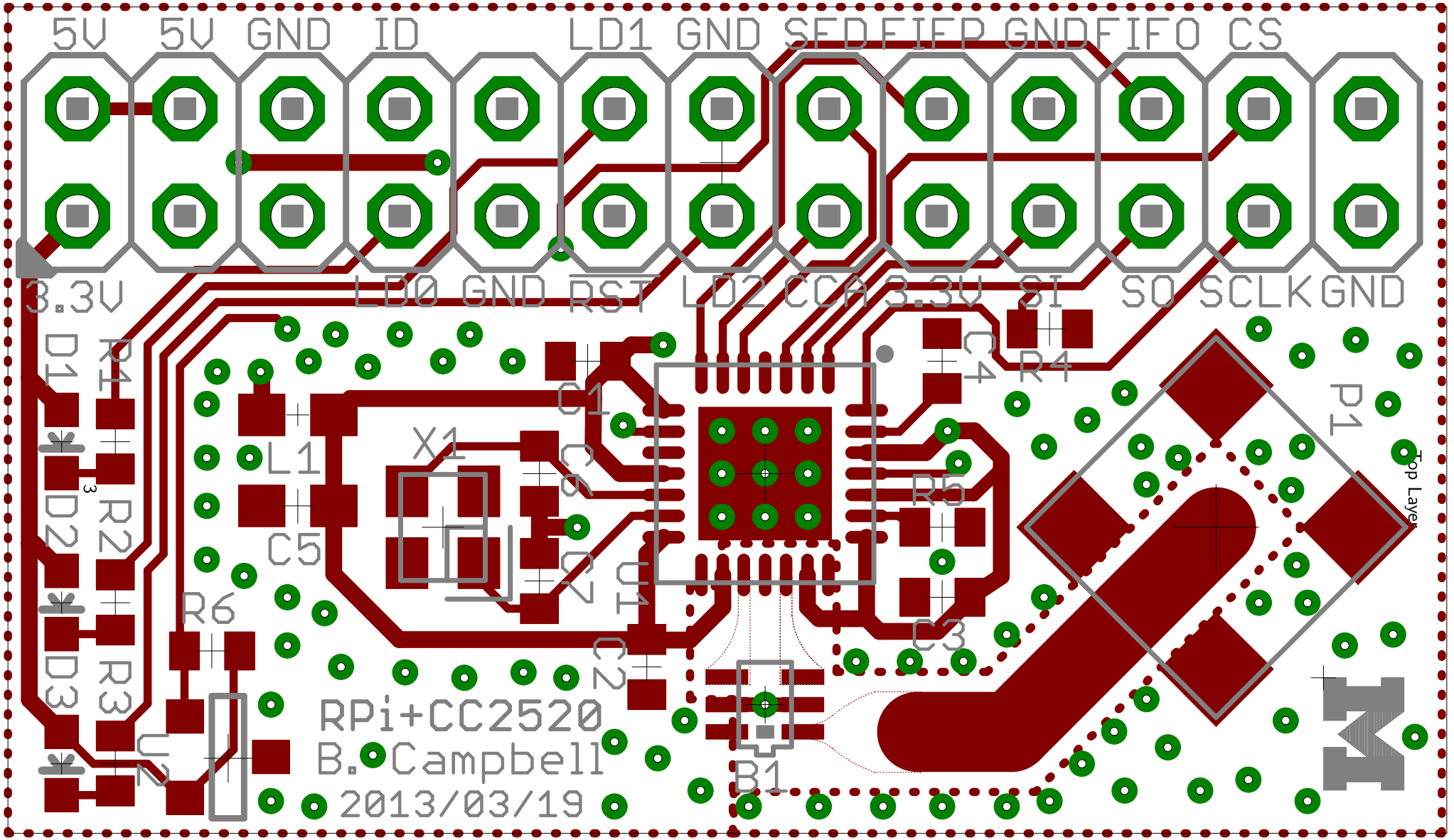
5V 5V GND ID LD1 GND SFD FIFP GNDFIFO CS
3.3V LD0 GND RST LD2 CCA 3.3V SI SO SCLK GND
D1
R4
D2
R2
D3
R3
R6
U2
L1
C5
X1
C1
C6
C7
C2
C4
R4
R5
C3
P1
Top Layer
RPi+CC2520
B.Campbell
2013/03/19
B1

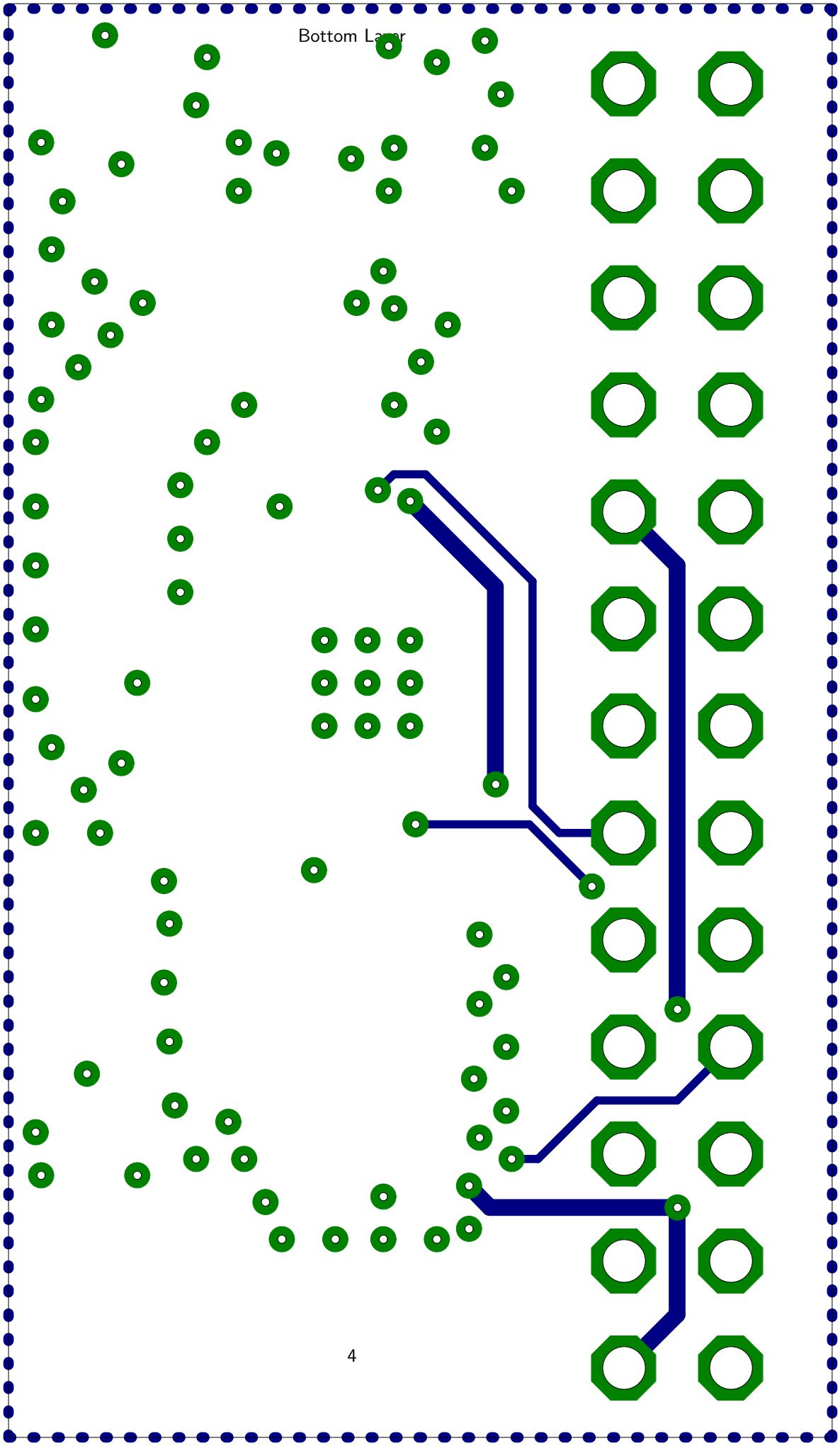
Bottom Layer

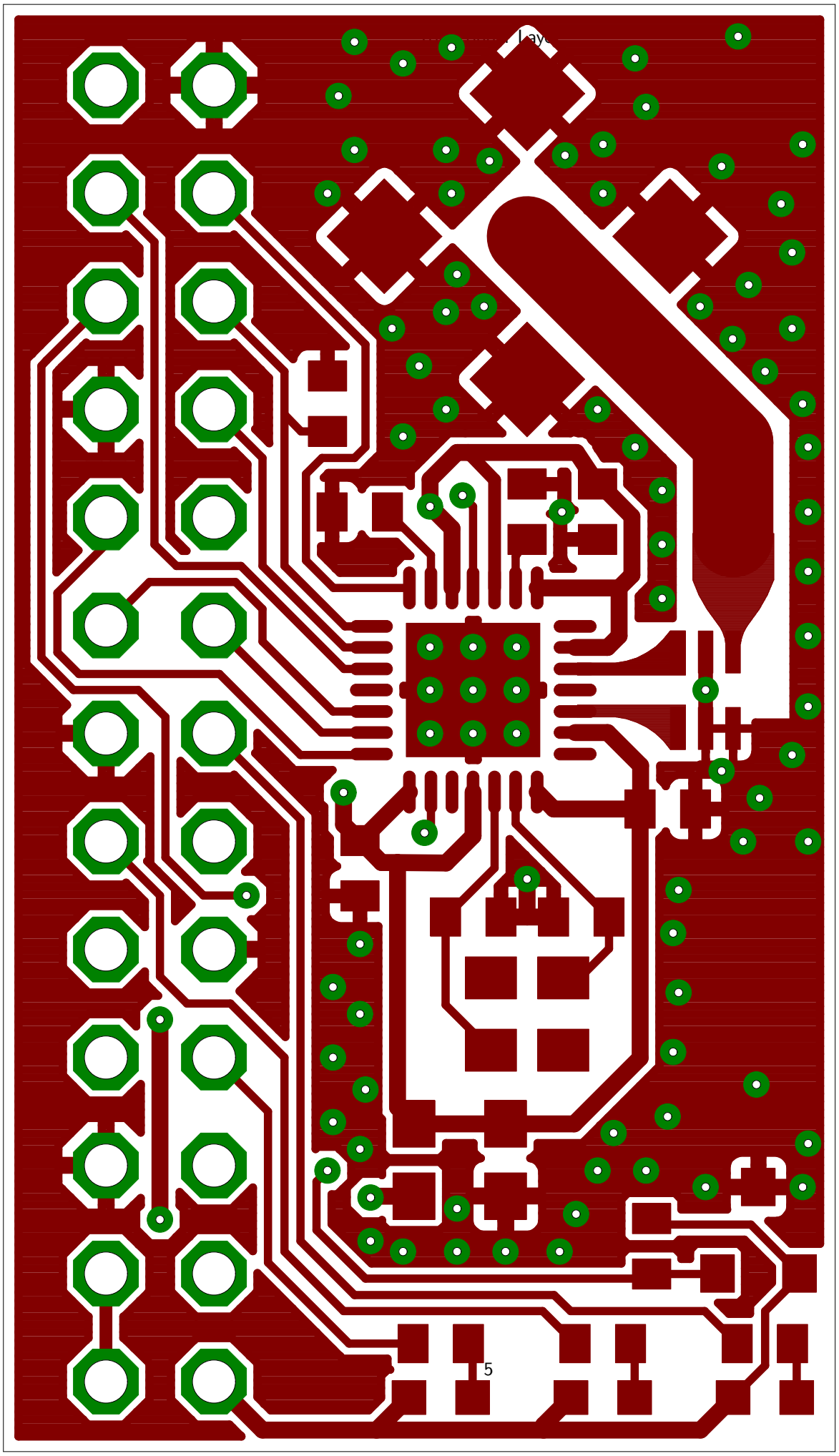
5

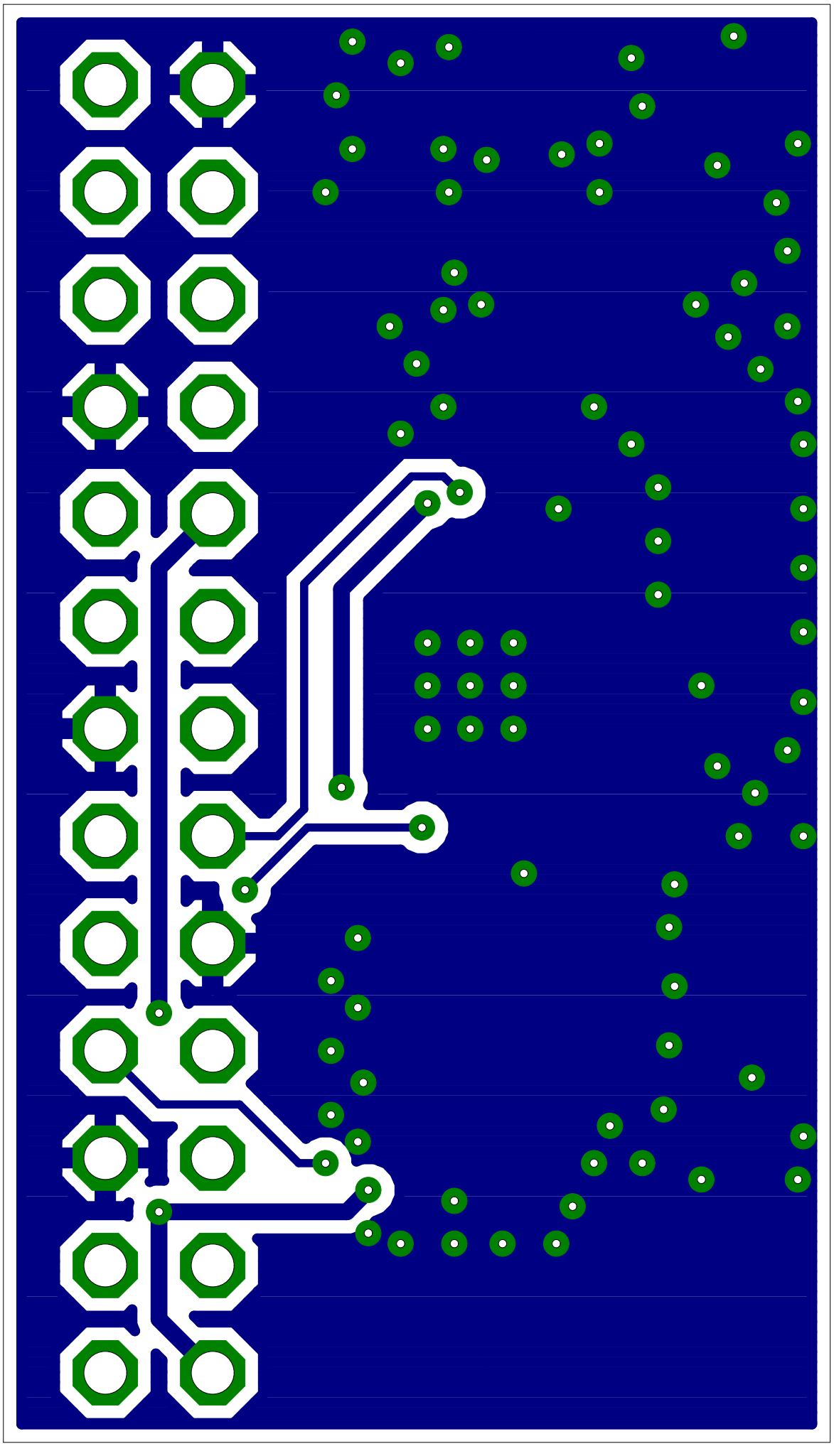

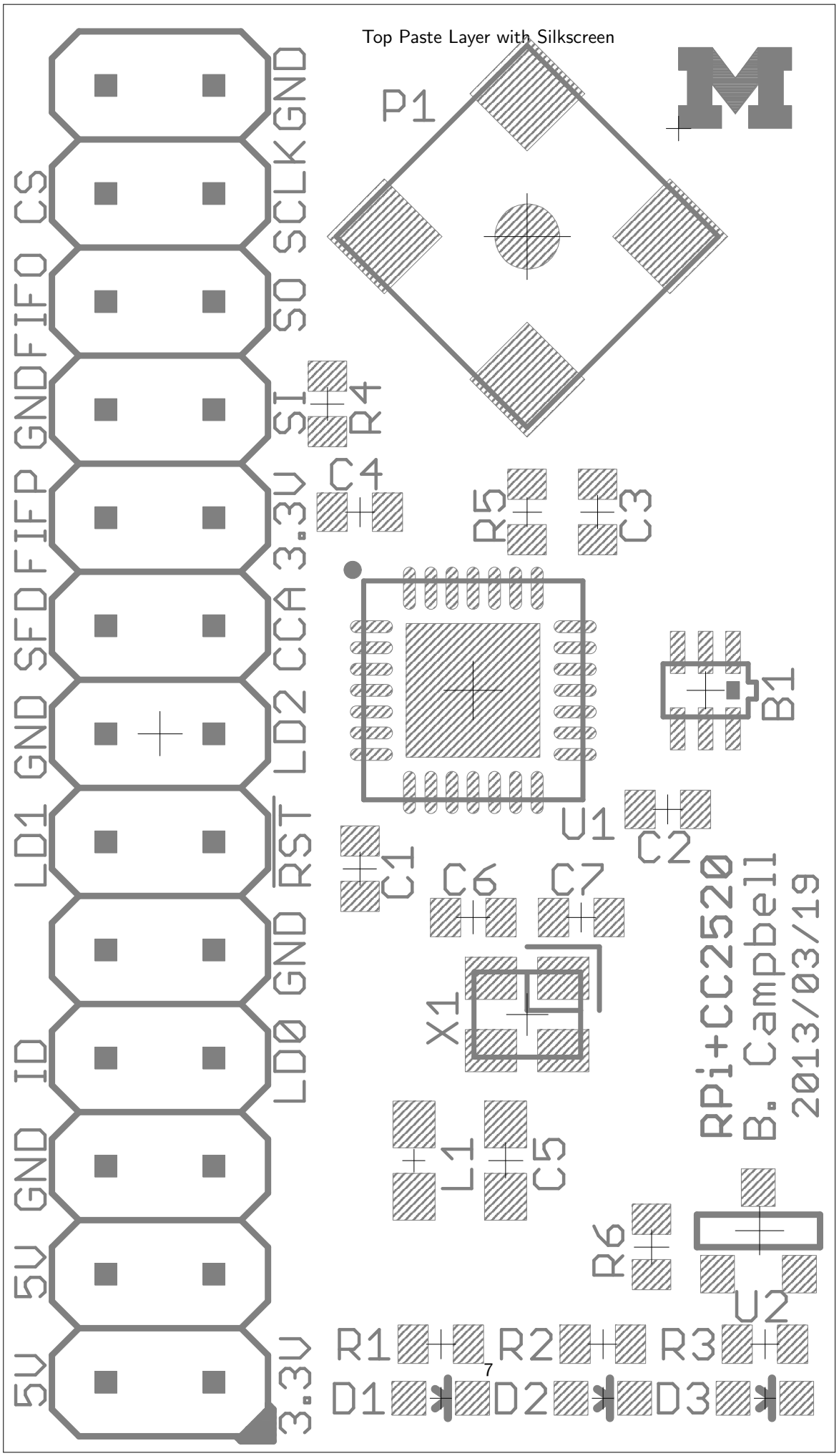
Top Paste Layer with Silkscreen
P1
5V
5V
GND
ID
LD0
GND
RST
LD2
CCA
3.3V
LD1
GND
SFD
FIFP
GND
FIFO
CS
SO
SCLK
GND
3.3V
SI
R4
C4
R5
C3
U1
B1
C1
C2
C6
C7
X1
L1
C5
R6
U2
R1
R2
R3
D1
D2
D3
RPi+CC2520
B. Campbell
2013/03/19

Bottom Paste Layer with Silkscreen

Top and Bottom Layers 1:1 Scale

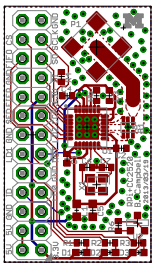

Top Layer 1:1 Scale

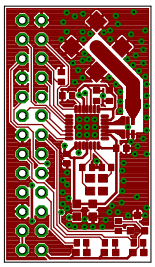
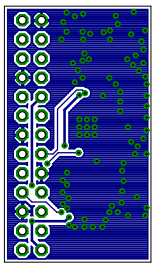
Bottom Copper Layer 1:1 Scale