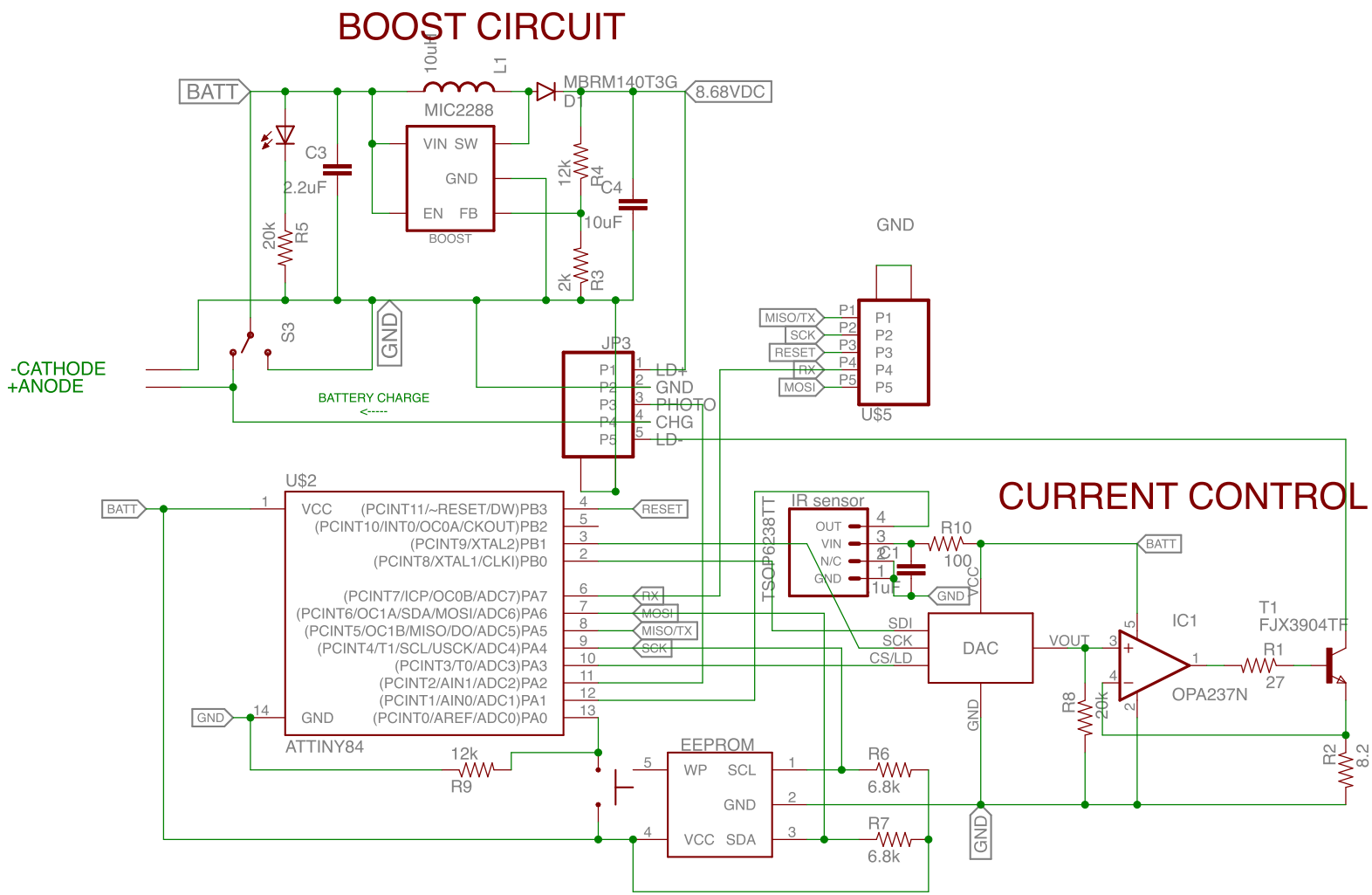

For more information visit:

cerebro.readthedocs.io/en/latest/#

Andy Lustig	
Cerebro 4.7	
6/14/16 5:52 PM	
Sheet: 1/1	