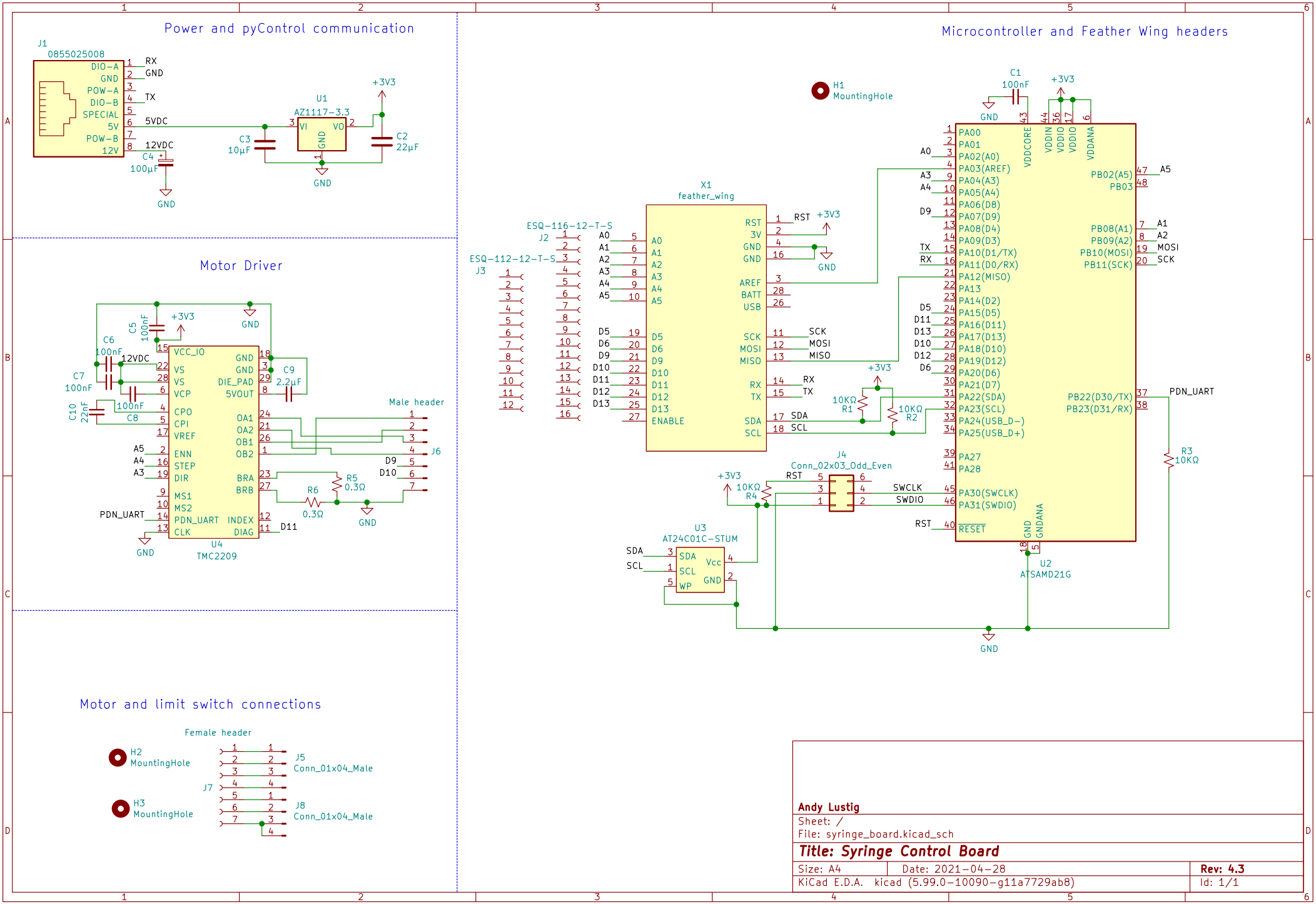
Power and pyControl communication
J1
0855025008
DIO-A
GND
POW-A
DIO-B
SPECIAL
5V
POW-B
12V
RX
GND
TX
5VDC
12VDC
C4
100µF
C3
10µF
U1
AZ1117-3.3
VI
VO
GND
+3V3
C2
22µF
Motor Driver
C5
100nF
C6
100nF
C7
100nF
C10
22nF
C8
100nF
C9
2.2µF
VCC_IO
VS
VCP
CPO
CPI
VREF
ENN
STEP
DIR
MS1
MS2
PDN_UART
CLK
DIE_PAD
5VOUT
OA1
OA2
OB1
OB2
BRA
BRB
INDEX
DIAG
U4
TMC2209
Male header
J6
R5
0.3Ω
R6
0.3Ω
Motor and limit switch connections
Female header
H2
MountingHole
H3
MountingHole
J7
J5
Conn_01x04_Male
J8
Conn_01x04_Male
Microcontroller and Feather Wing headers
H1
MountingHole
C1
100nF
X1
feather_wing
ESQ-116-12-T-S
J2
ESQ-112-12-T-S
J3
RST
3V
AREF
BATT
USB
SCK
MOSI
MISO
SDA
SCL
ENABLE
R1
10KΩ
R2
10KΩ
J4
Conn_02x03_Odd_Even
SWCLK
SWDIO
R4
10KΩ
U3
AT24C01C-STUM
Vcc
WP
U2
ATSAMD21G
VDDCORE
VDDIN
VDDIO
VDDANA
GNDANA
RESET
R3
10KΩ
Andy Lustig
Sheet: /
File: syringe_board.kicad_sch
Title: Syringe Control Board
Size: A4
Date: 2021-04-28
Rev: 4.3
KiCad E.D.A. kicad (5.99.0-10090-g11a7729ab8)
Id: 1/1