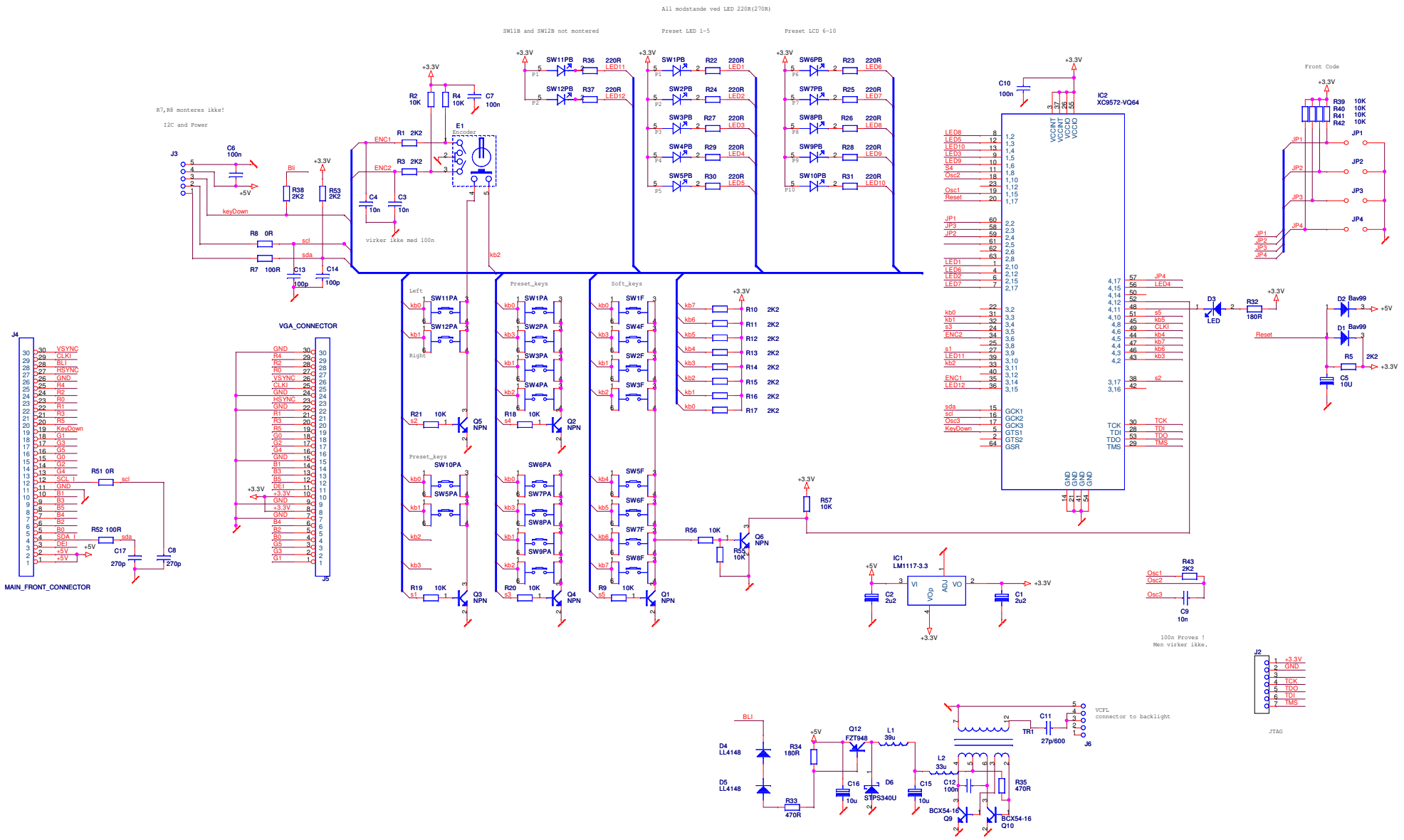

DK-Technologies A/S	
Title	PT0760M/660M Front Panel PCB with Sharp display
Size A2	Document Number 4008 117 08402 — Rev 05
Date: Monday, March 10, 2008	Sheet 1 of 1