MSD-1: Course Syllabus

Unit 1: Sensors: Sensors for robotics application - position, speed, acceleration, orientation, range.

Unit 2: Actuators: general characteristics, motors, control valves.

Unit 3: Introduction to mechanical elements and transformations, basic concepts of kinematics, Devise models for rotational, translational, electromechanical, and mechanical systems.

MSD-1: Course Outcomes

- CO-1 Describe important elements of the mechatronic system.
- CO-2 Identify and describe various types of sensors and actuators essential for a mechatronic system.
- CO-3 Describe and design basic mechanical elements.
- CO-4 Apply kinematic concepts to analyze the motion of simple mechanisms.

MSD: Course Syllabus

Unit 1: Sensors and Actuators:

Sensors for robotics application - position, speed, acceleration, orientation, range.

Actuators - general characteristics, motors, control valves.

Unit 2: Introduction to mechanical elements and transformations, basic concepts of kinematics and dynamics. Devise models for rotational, translational, electromechanical, and mechanical systems.

Unit 3: Computer based feedback control:

Sampled data control, sampling and hold, PID control implementation, stability, bilinear transformation.

Unit 4: Design and analysis of mechanisms.

Unit 5: Programming and hardware experiments.

MSD: Course Outcomes

- CO-1 Describe important elements of the mechatronics system
- CO-2 Apply the previous knowledge of microcontroller programming for controlling multidisciplinary mechatronic systems.
- CO-3 Describe and design basic mechanical elements and their feedback control.
- CO-4 Synthesize and analyze a range of mechanisms.
- CO-5 Design and execute a multidisciplinary project based on the given specifications as part of a team.

Reference Books:

1. Bentley, John P. ‘‘Principles of measurement systems,” Pearson education, 2005.
2. D.R. Coughanowr, "Process system analysis and control," McGraw Hill, 1991
3. G.F. Franklin, J.D. Powell and M.L. Workman, ‘‘Digital control of dynamic systems”, Addison Wesley, 3rd edition, 1998.
4. Robert L. Norton, ‘‘DESIGN OF MACHINERY”, McGraw-Hill, 6th edition, 2019
5. William Bolton, ‘‘Mechatronics: Electronic Control Systems in Mechanical and Electrical Engineering,” Pearson, 6th edition, 2015.
6. http://wiki.ros.org/
7. User manual of microcontroller and data sheets of sensors and actuators

What is **Mechatronics?**

- **Mechatronics** is an *interdisciplinary branch of engineering that focuses on the integration of mechanical, electrical and electronic engineering systems, and also includes a combination of robotics, electronics, computer science, telecommunications, systems, control, and product engineering.

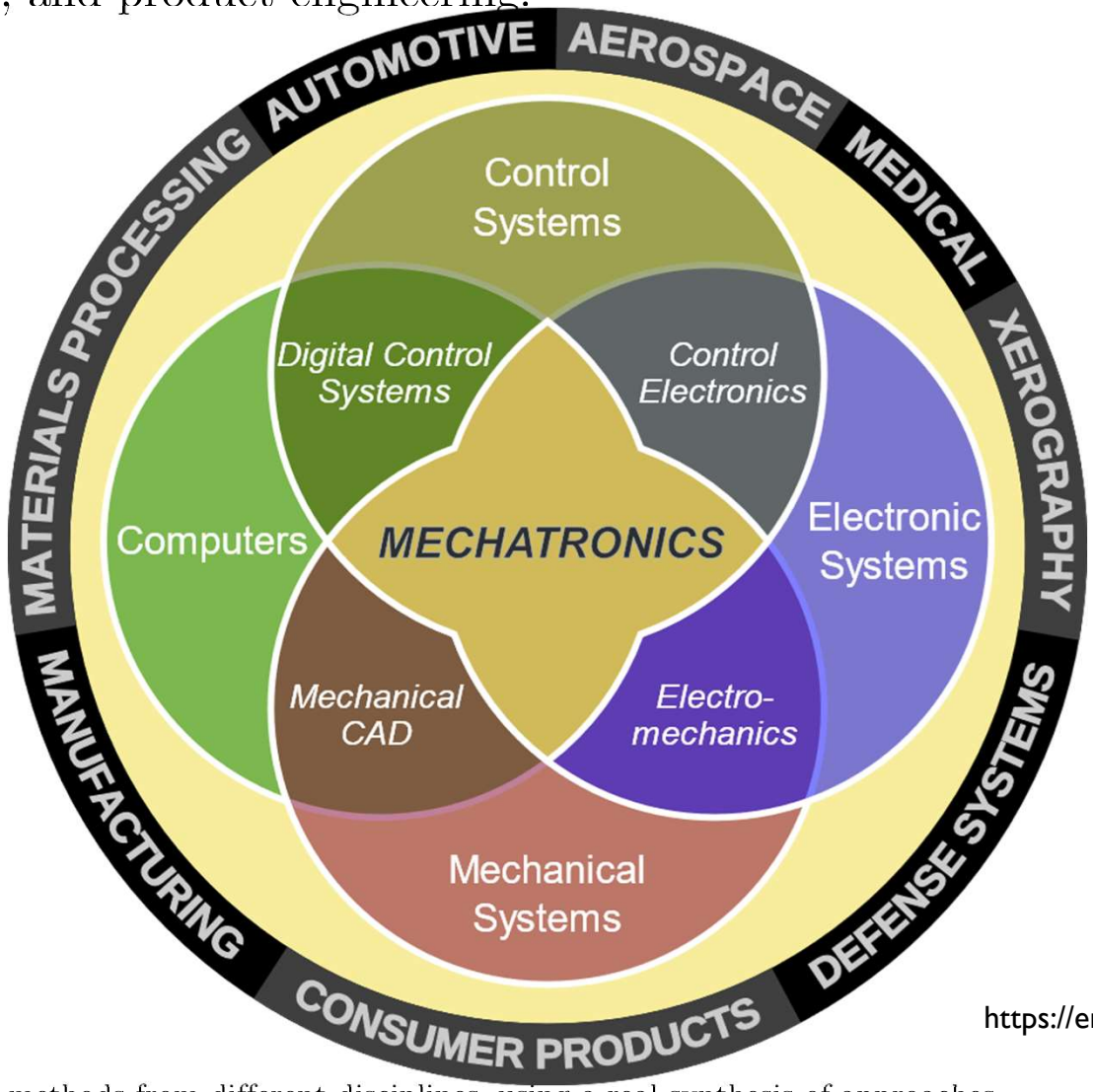

https://en.wikipedia.org/wiki/File:Mecha.gif

*Integrating knowledge and methods from different disciplines, using a real synthesis of approaches.

Introduction

Unit 1 and 2 – MSD1

Unit 1, 3 and 5 – MSD

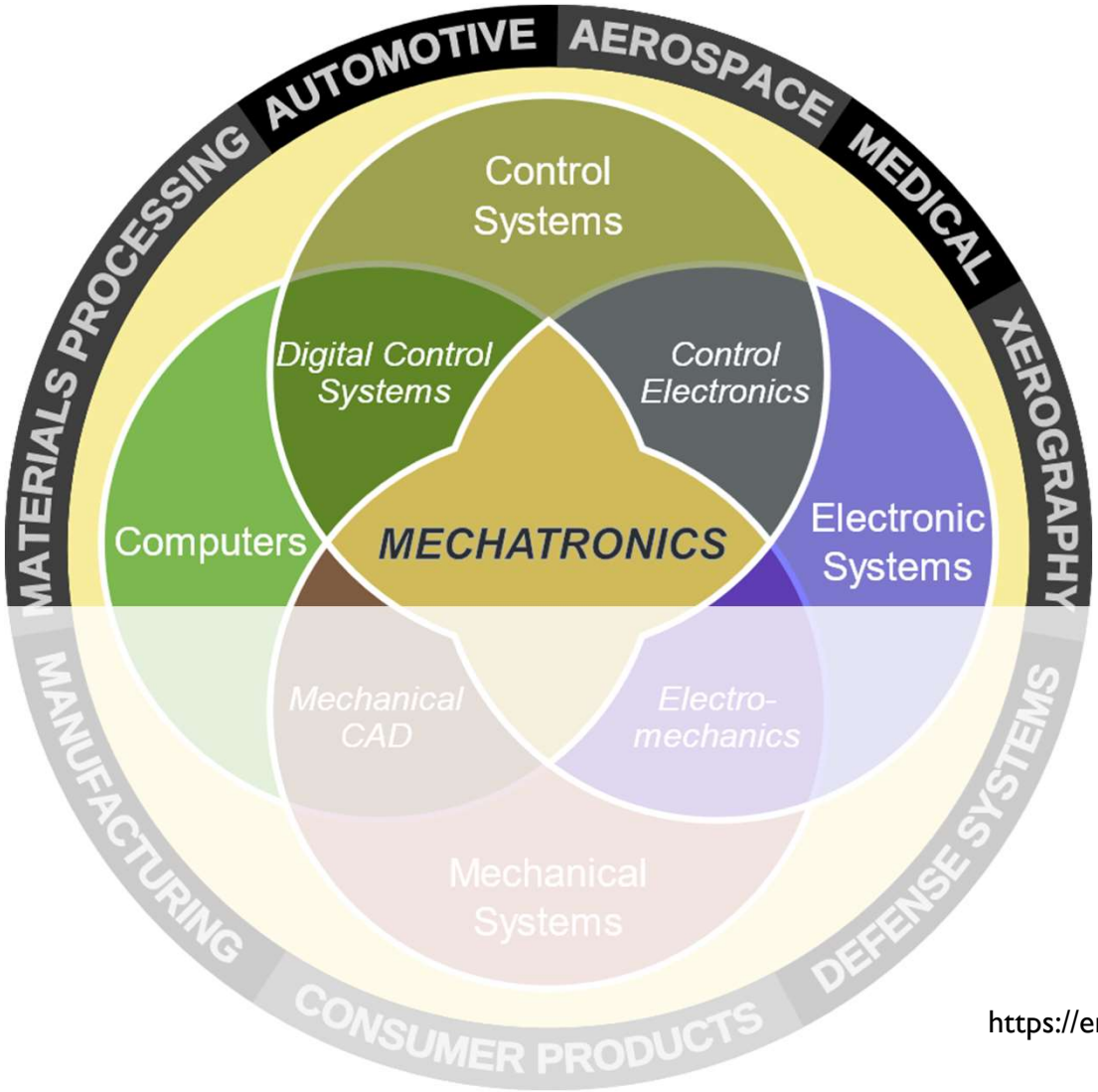

https://en.wikipedia.org/wiki/File:Mecha.gif

Introduction

Unit 3 – MSD1

Unit 2, 4, and 5 – MSD

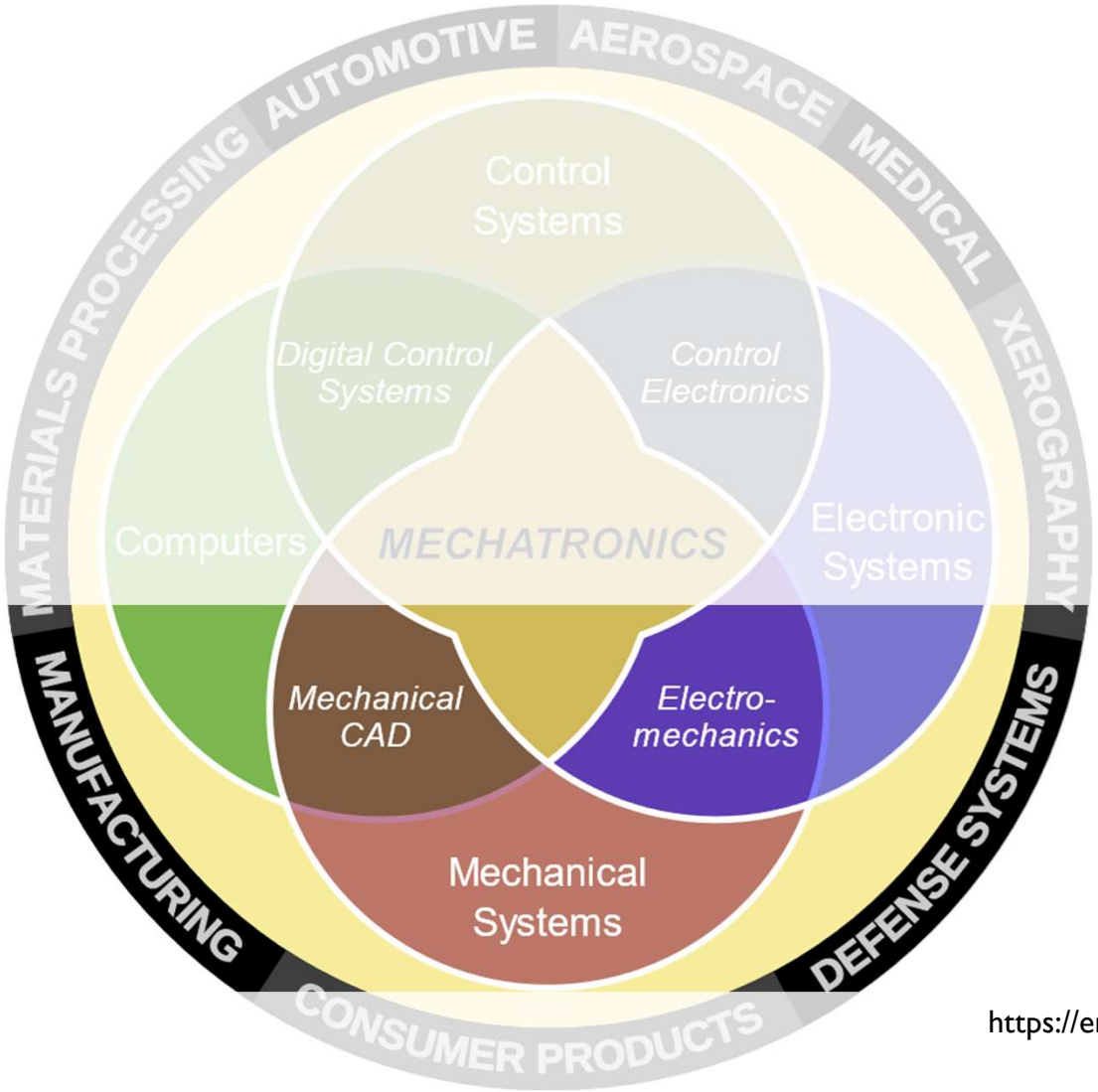

https://en.wikipedia.org/wiki/File:Mecha.gif

Current Research Activities

- Mobile manipulation
  - Throwing, Striking, Pushing, Dual arm manipulation
- Novel Mechanism Design (Synthesis/Analysis)
  - Gripper for targeted throwing
  - Adaptive landing gear mechanism for drones
  - Multimodal robots
  - Variable stiffness actuator
- Controls
  - Optimal Control/Trajectory optimization – System parameter identification
  - Transmission line inspection/Aerial Throwing
  - Physics-based and Learning based models
  - Impedance control
  - Hybrid force/position control

Throwing Manipulation

- Why Throwing?
  - fast rearrangement,
  - sorting tasks,
  - placing the object outside the limited workspace with less effort.

One Patent Filed

"A Novel Hybrid Gripper Capable of Grasping and Throwin Manipulation." **IEEE/ASME Transactions on Mechatronics** (2023).

Featured in IEEE Spectrum Friday Videos: https://spectrum.ieee.org/video-friday-reflex-grasping

Conventional Method

Bosch Research DARKO robot in a throwing motion, 2021

Proposed Method

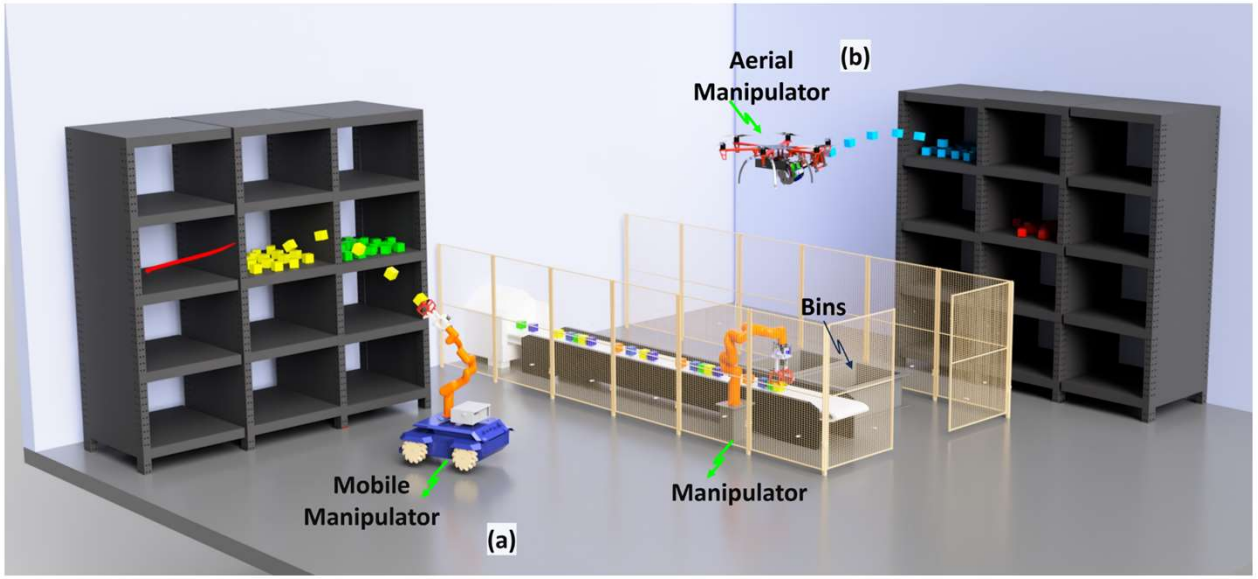

A Novel Hybrid Gripper Capable Of Grasping And Throwing Manipulation

Nagamanikandan Govindan, Bharadhwaj Ramachandran, Pasala Haasith Venkata Sai,

K Madhava Krishna

Robotics Research Center

International Institute of Information Technology Hyderabad, India

Multimedia extension prepared for

IEEE Transactions on Mechatronics

Throwing Manipulation

INTERNATIONAL INSTITUTE OF INFORMATION TECHNOLOGY
HYDERABAD

Robotics Research Center

Identification and Learning-Based Control of an End-Effector for Targeted Throwing

Pasala Haasith Venkata Sai [1], Nagamanikandan Govindan [1], Samarth Brahmbhatt [2]

Multimedia extension prepared for
IEEE Robotics and Automation Letters

[1] Robotics Research Center, International Institute of Information Technology Hyderabad, India.
[2] Intel Labs, Santa Clara, California, USA.

Pasala Haasith V S, **Nagamanikandan G**, and Samarth B. "Identification and Learning-Based Control of an End-Effector for Targeted Throwing." *IEEE Robotics and Automation Letters,* Aug 2024. 10.1109/LRA.2024.3462250 IF: 4.6

Nonprehensile Manipulation

- A Planning Framework Combining Striking, Pushing, and Pick & Place Motion Primitives
- A high-level action sequence planner, dedicated offline planners for each manipulation primitive (Strike, Push, and Pick & Place), and a whole-body controller.
- **Striking**

$$\min_{p,u} C(\boldsymbol{p},\boldsymbol{u}) \;\; = \bar{\boldsymbol{p}}_{\boldsymbol{N}}{}^{\boldsymbol{T}} \boldsymbol{W}_{\boldsymbol{p_N}} \bar{\boldsymbol{p}}_{\boldsymbol{N}} + u^T \boldsymbol{W}_{\boldsymbol{u}} \boldsymbol{u}$$

subject to

$$\boldsymbol{p}_{\mathbf{i+1}} = \boldsymbol{p}_{\boldsymbol{i}} + \Delta t\, \dot{\boldsymbol{p}}_{\boldsymbol{i}}$$

$$\boldsymbol{b}_l \;\leq\; [\boldsymbol{p} \quad \boldsymbol{u}]^T \;\leq \boldsymbol{b}_h$$

Where $\boldsymbol{p} \;=\; [x \quad y \quad \dot{x} \quad \dot{y}\,]^{\boldsymbol{T}}$

$$\boldsymbol{u} = [v \quad \theta\,]^{\boldsymbol{T}}$$

Multifunctional Underactuated Mechanism - Drones

Adaptive landing gears

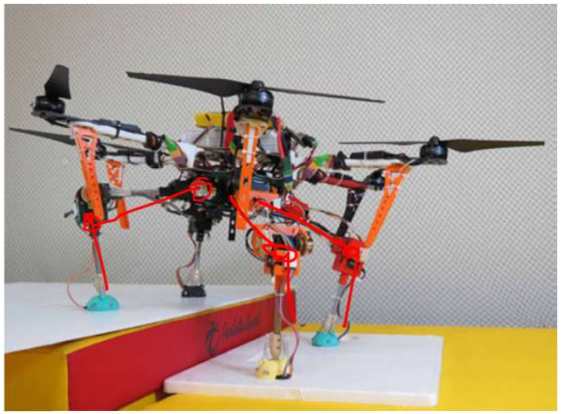

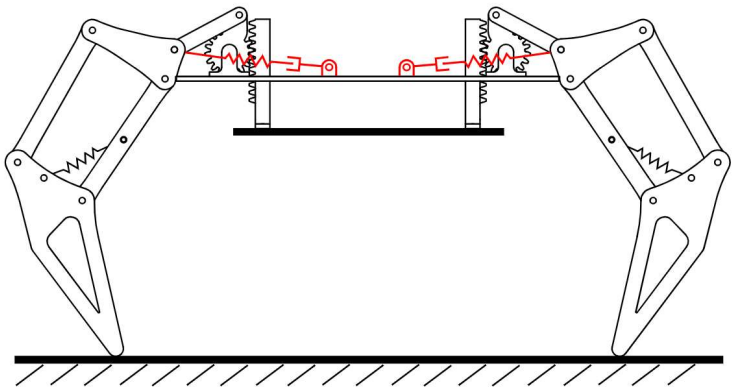

Perching

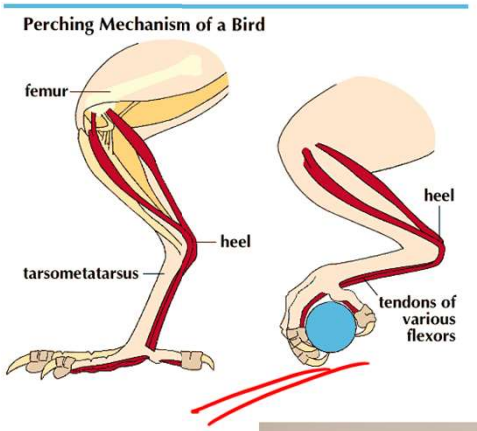

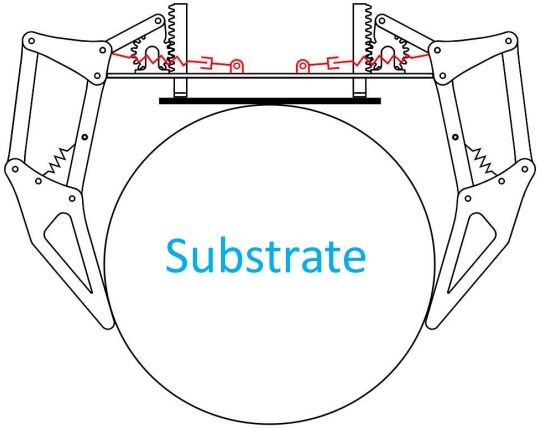

Grasping

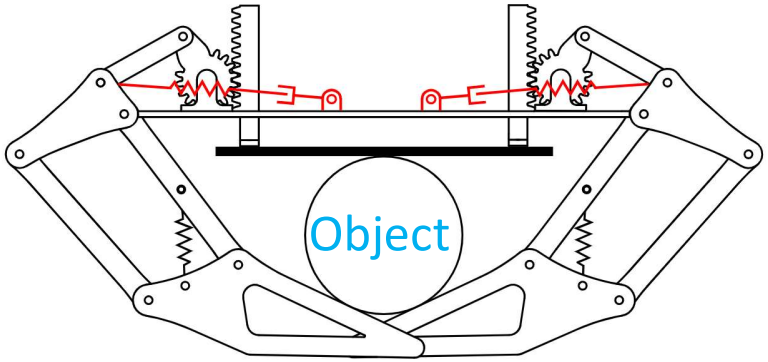

Manuscript under review – Trans. ASME - Journal of Mechanisms and Robotics

Multifunctional Underactuated Mechanism

Deep Patel
Robotics Research Center,
International Institute of Information Technology Hyderabad
Gachibowli, Hyderabad, India

Nagamanikandan Govindan
Robotics Research Center,
International Institute of Information Technology Hyderabad
Gachibowli, Hyderabad, India

Manas Reddy Ramidi
Robotics Research Center,
International Institute of Information Technology Hyderabad
Gachibowli, Hyderabad, India

Harikumar Kandath
Robotics Research Center,
International Institute of Information Technology Hyderabad
Gachibowli, Hyderabad, India

GPALM – Multifunctional Underactuated Mechanism with Grasping, Perching and Adaptive Landing skills for drone applications

Manuscript under review – Trans. ASME - Journal of Mechanisms and Robotics

WireFlie: A Novel Obstacle-Overcoming Mechanism for Autonomous Transmission Line Inspection Drones

INTERNATIONAL INSTITUTE OF INFORMATION TECHNOLOGY
HYDERABAD

Robotics Research Center

WireFlie: A Novel Obstacle-Overcoming Mechanism for Autonomous Transmission Line Inspection Drones

Aditya Sehgal, Zahiruddin Mahammad, Poorna Sasank, Ankur Badhwar, Nagamanikandan Govindan

IEEE Robotics and Automation Letters

All authors are with Robotics Research Center, International Institute of Information Technology, Hyderabad, India

ROBOTICS RESEARCH CENTER, IIIT-HYDERABAD

Manuscript under review – IEEE Robotics and Automation Letters

Gripper Design – Underactuated robot

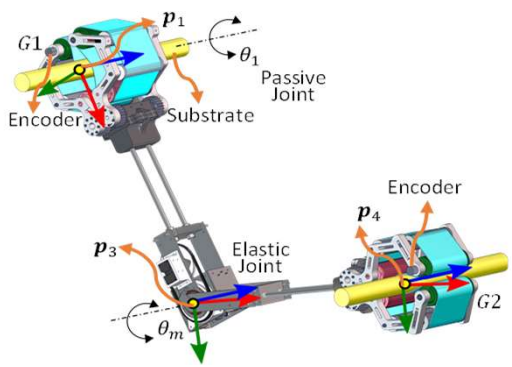

A new gripper that acts as an active and passive joint to facilitate prehensile grasping and locomotion

Nagamanikandan Govindan, Shashank Ramesh, and Asokan Thondiyath

IIIT Hyderabad

Robotics Research Center,
International Institute of Information Technology,
Hyderabad, India

Robotics Lab,
Department of Engineering Design,
Indian Institute of Technology Madras, India

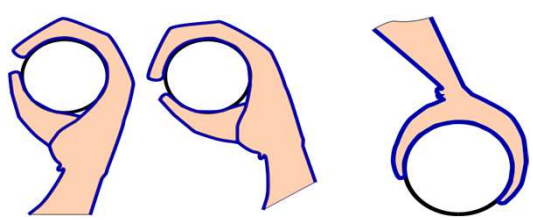

Prehensile hand and foot

Nagamanikandan G., Shashank R., and Asokan T., "A new gripper that acts as an active and passive joint to facilitate prehensile grasping and locomotion." In 2022 IEEE/RSJ International Conference on Intelligent Robots and Systems (IROS), pp. 1425-1431. IEEE, 2022.

GraspMan hand

Design and Analysis of a Multimodal Grasper Having Shape Conformity and Within-Hand Manipulation With Adjustable Contact Forces

Nagamanikandan Govindan, Asokan Thondiyath

Robotics Lab
Department of Engineering Design
Indian Institute of Technology Madras, India

Multimedia Extension prepared for
ASME JOURNAL OF MECHANISMS AND ROBOTICS

GraspMan hand has featured in the timeline covering 106 years (1912–2018) of Research & Development of robotic hands - Annual Review of Control, Robotics, and Autonomous Systems - ***A Century of Robotic Hands.***

'A robot grasper that can climb pipes' has featured in *Nature*

Mechanisms – Variable Stiffness Actuator

Synthesis and Analysis → **CAD Modeling** → **Prototyping and Testing**

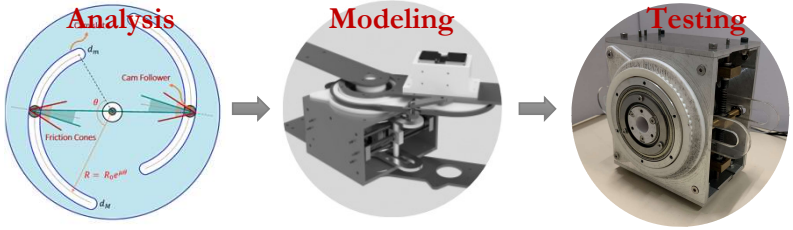

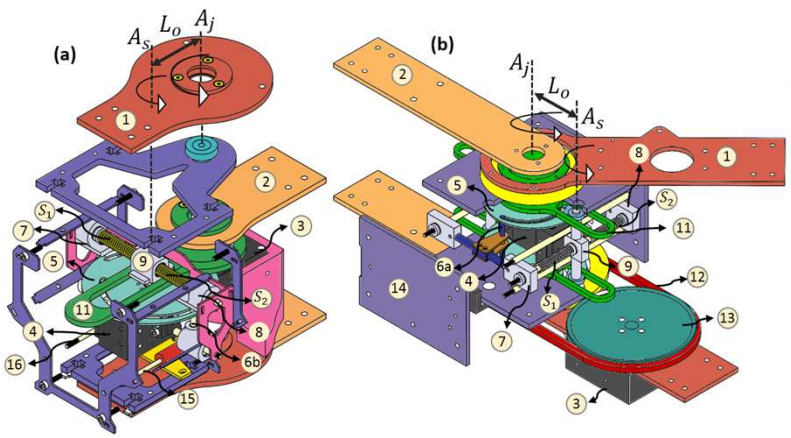

①	Input link
②	Output link
③	Base motor
④	Stiffness motor
⑤	Cam
⑥	Cam follower
⑦	Sliding block 1
⑧	Sliding block 3
⑨	Sliding block 2
S_1, S_2	Nonlinear springs
⑪	Slotted link
⑫	Timing belt
⑬	Timing pulley
⑭	Outer metal casing
⑮	Linear guide
⑯	Lead screw

Variable Stiffness Joint Module (VSJM) Assembly

Nagamanikandan G, Shashank R, and Asokan T. "Design of a Variable Stiffness Joint Module to Quickly Change the Stiffness and to Reduce the Power Consumption." IEEE Access. July 2020; vol. 8, pp. 138318-138330.

Mini project – Animatronic eye – S2023

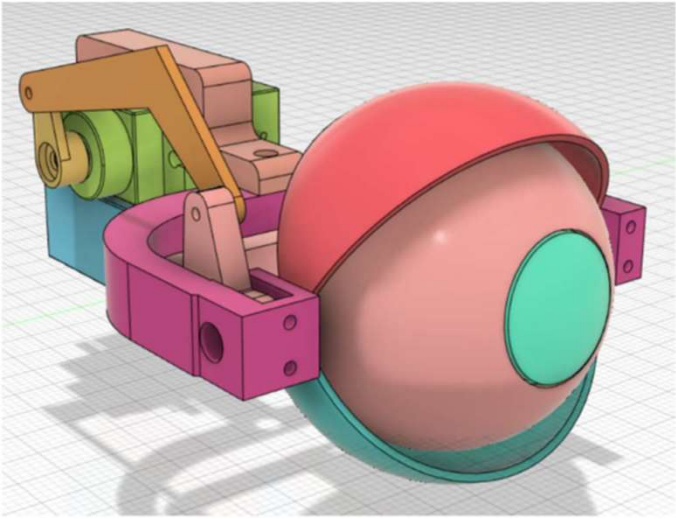

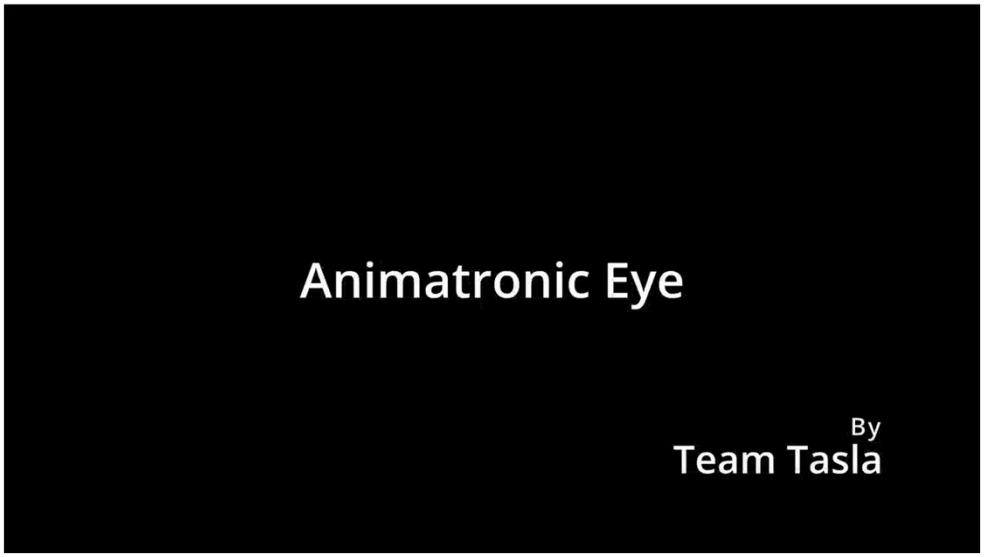

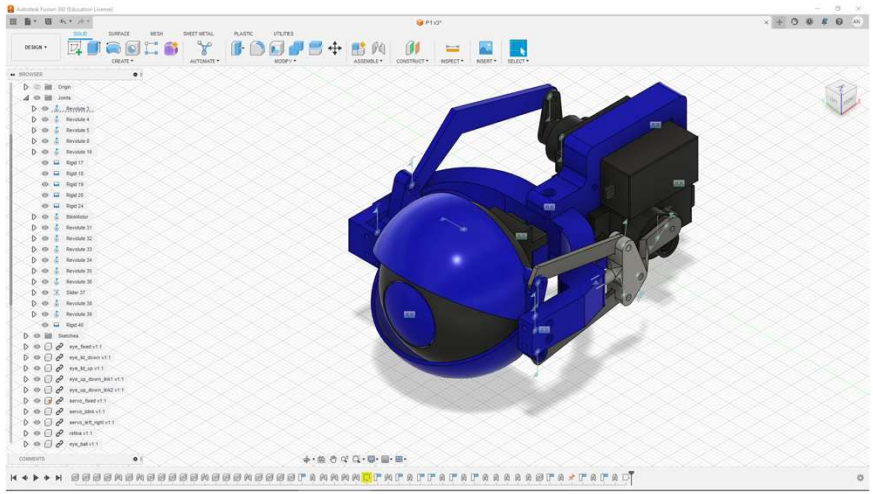

Main project – Walking mechanism – S2023

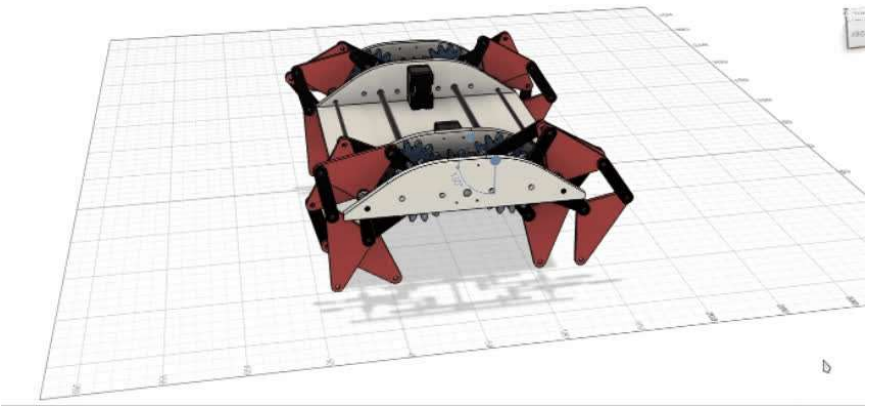

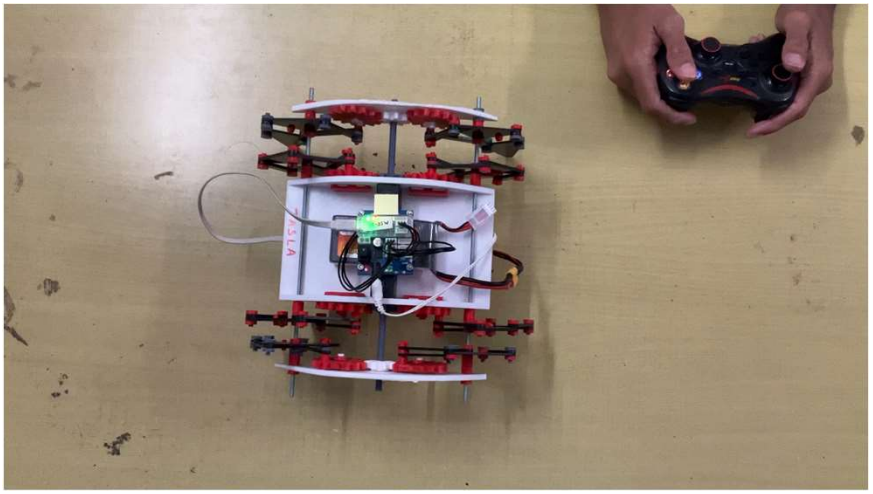

More Definitions

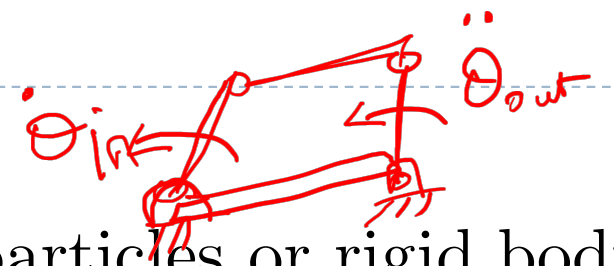

- **Kinematics**

  - Study of motion of system of particles or rigid bodies without regard to forces/moments

  - Motion is described by position and its time derivatives, velocity, acceleration, Jerk, etc.
  - ensure the functionality of the mechanism/machine

- **Dynamics**

  - Study of forces/Moments on systems in motion

  - verify that the parts can withstand the induced forces

Definitions

- **Machine:** $\mathcal{E}^E$ F an → ME → ω | C → Mech F = m a
  - A self-contained assembly of components that transmits/modifies energy to perform or assist a specific task.
  - It has an energy source (input / prime mover/motor)
  - It accomplishes a well-defined task (output/work)

- **Machine (Mechanical)**: Mechanical forces of nature, accompanied by motion, are compelled to do the work (task).

- Important distinction to make between cause and effect when analysing the motion of objects.
  - How does a particular object move?
    - The study of geometry of motion of a trajectory
  - Why does the object move the way it does?
    - The study of cause behind the changes of motion

Kinematics

RDC

Analysis | Synthesis

- Newton's 2nd law connect these two questions

$$\boldsymbol{F} = m\boldsymbol{a}$$

The RHS gives the geometrical description of an object

LHS answers why does the object moves the way it does? What causes the motion to change?

Mechanism

- It is a group of rigid bodies (*links*) connected to each other by rigid kinematic pairs (*joints*) to transmit force and motion.

- It is a kinematic chain where **one of the links is fixed**.

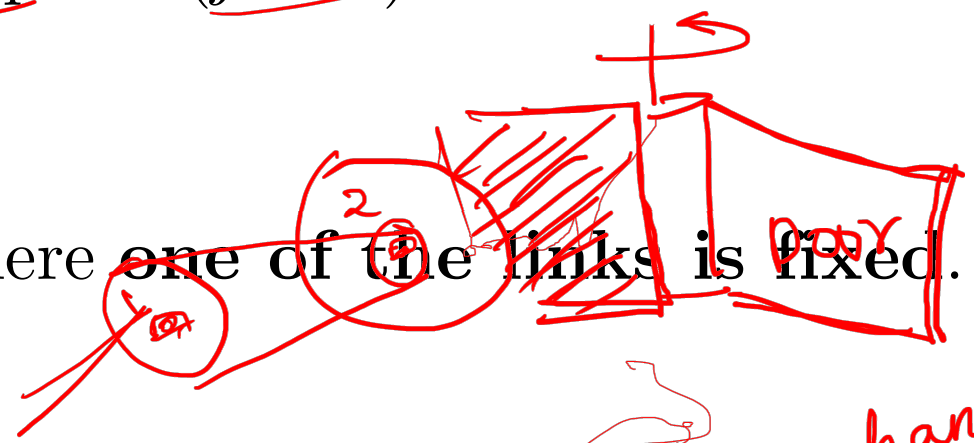

Biomechanical

- *Mechanisms are the basic building blocks of mechanical machines. A machine is designed for a specific task using appropriate mechanisms.*

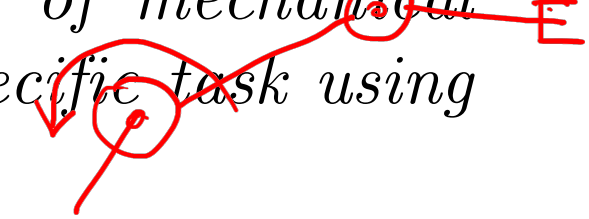

Mechanisms

Virtually any machine or device that moves and contains one or more kinematic elements such as links, cams, gears, belts, and chains.

Name few mechanisms.

A Short History

Archimedes (287–212 BCE) studied the lever using geometry. Until the 1500s CE, Archimedes and Hero of Alexandria (circa 10 – 70 CE) were still the sources of mechanism theory.

Leonardo da Vinci (1452 – 1519) rejuvenated interest and practical design methods in machines and mechanisms during the European Renaissance.

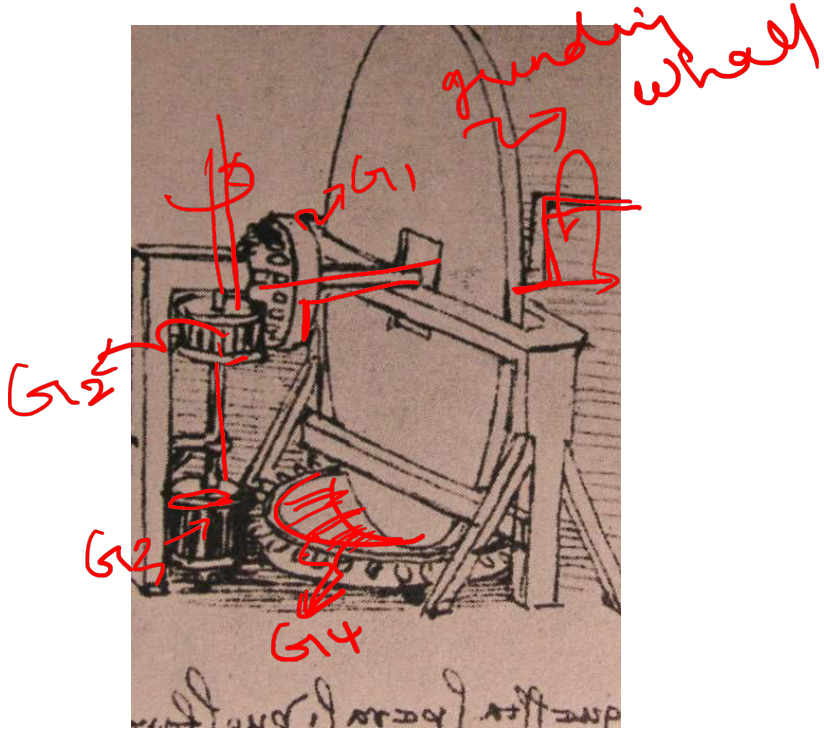

A machine for grinding convex lenses

*MORE INFO: https://www.ohio.edu/mechanical-faculty/williams/html/PDF/HistoryOfMechanisms.pdf

A Short History

In 1782 **James Watt** (1736 – 1819) invented the six-bar Watt's linkage to convert rotational shaft motion into translating motion. He was a Scottish inventor, perhaps the first mechanical engineer.

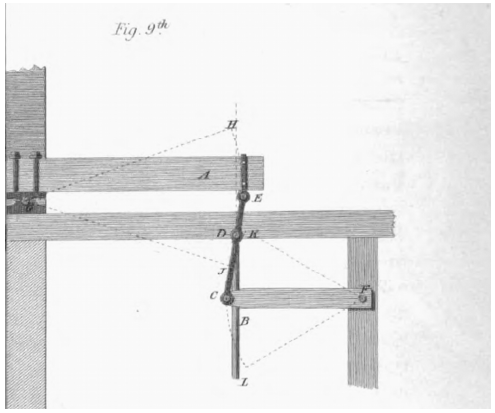

James Watt's patent application (top left part) showing the straightline linkage

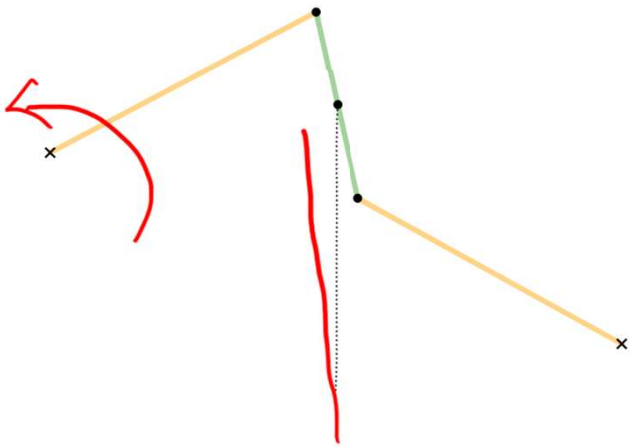

https://en.wikipedia.org/wiki/Watt%27s_linkage

*MORE INFO: https://www.ohio.edu/mechanical-faculty/williams/html/PDF/HistoryOfMechanisms.pdf

A Short History

The **Peaucellier–Lipkin** linkage, invented in 1864, was the first true planar straight line mechanism – the first planar linkage capable of transforming rotary motion into perfect straight-line motion, and vice versa.

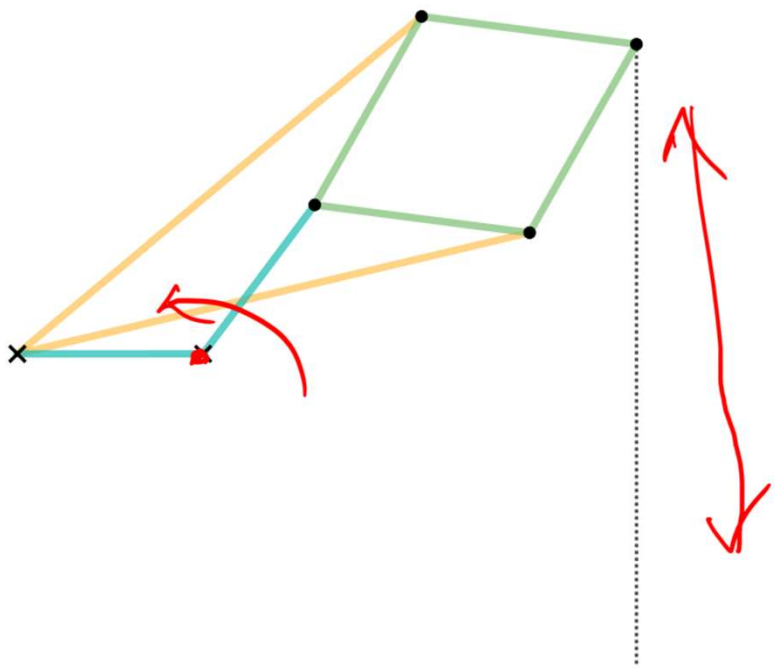

https://en.wikipedia.org/wiki/Peaucellier%E2%80%93Lipkin_linkage

English mathematician **James J. Sylvester** (1814 – 1897) expounded on the **Peaucellier** Linkage (invented in 1864), to generate an exact straight line from a rotating input.

*MORE INFO: https://www.ohio.edu/mechanical-faculty/williams/html/PDF/HistoryOfMechanisms.pdf

A Short History

- **Franz Grashof** (1826 – 1893), a German professor, developed his famous law to determine the rotatability of the input / output links of the four-bar linkage.

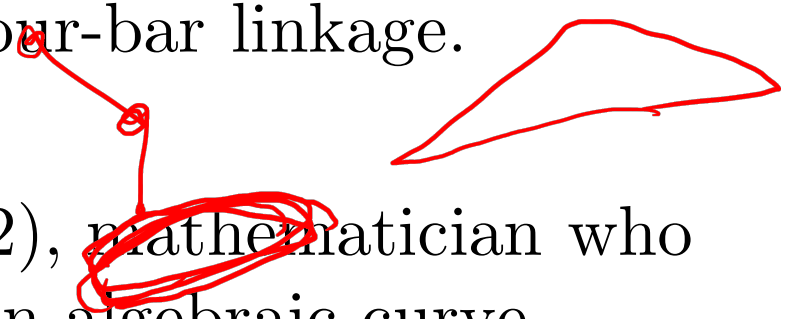

- **Alfred B. Kempe** (1849 – 1922), mathematician who extended linkages to trace a given algebraic curve

- In the late 1800s German **Franz Reuleaux** (1829 – 1905), Englishman **Alexander B. W. Kennedy** (1847 – 1928), and German **Ludwig E. H. Burmester** (1840 – 1927) rigorized the analysis and synthesis of linkage using descriptive geometry.

A Short History

Russian mathematician **L. Chebyshev** (1821 – 1894) developed analytical methods for the analysis and synthesis of linkages. **Chebyshev Polynomials** are used to provide optimal spacing of precision points for function generation and path generation.

In the mid-1900s American engineering professors **Ferdinand Freudenstein** (1926 – 2006) and one of his 500 Ph.D. students, **George N. Sandor** (1929 – 1996), initiated the computer-aided design of mechanisms at Columbia University.

By the mid-1970s these computer methods became important in the analysis, synthesis, and control of complicated machines and robot manipulators. **Freudenstein** is known as the "**Father of Modern Kinematics**" and his influence is so profound, a "Freudenstein Doctoral Descendent Tree"

https://sites.google.com/view/freudensteintree

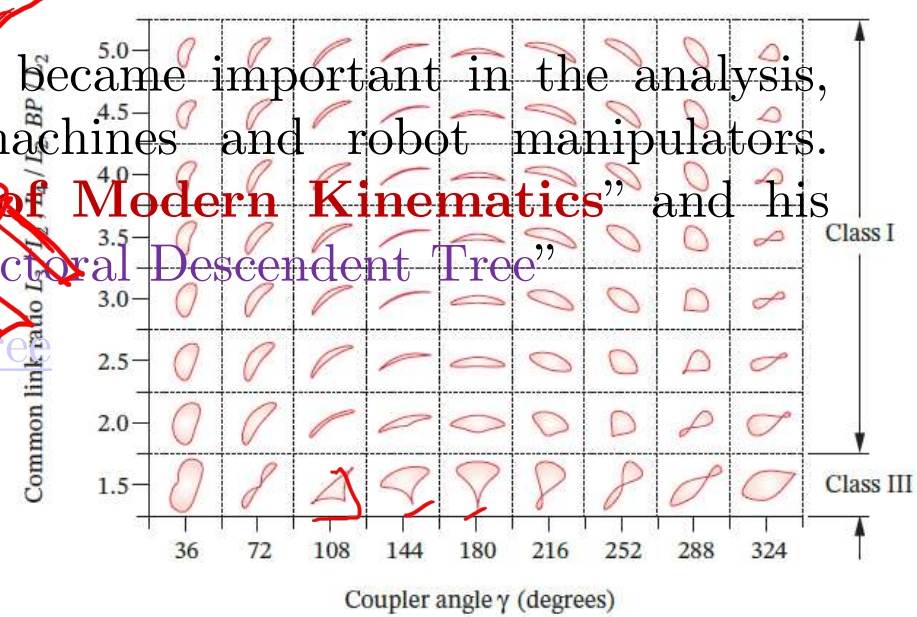

*MORE INFO: https://www.ohio.edu/mechanical-faculty/williams/html/PDF/HistoryOfMechanisms.pdf

Planar Linkages

- Wondered what kind of mechanism causes the wind shield wiper to oscillate?

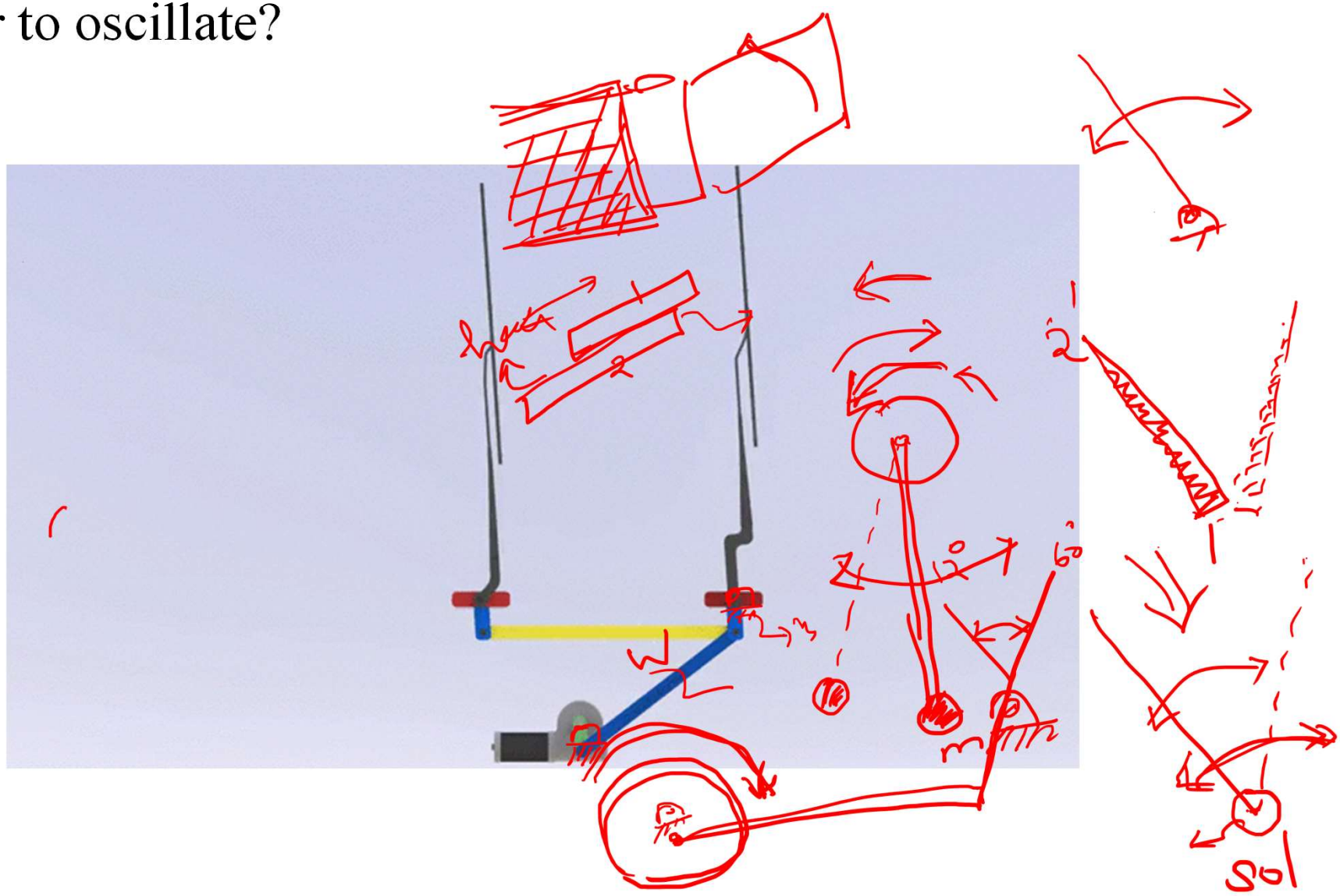

Planar Linkages

- Four bar mechanism

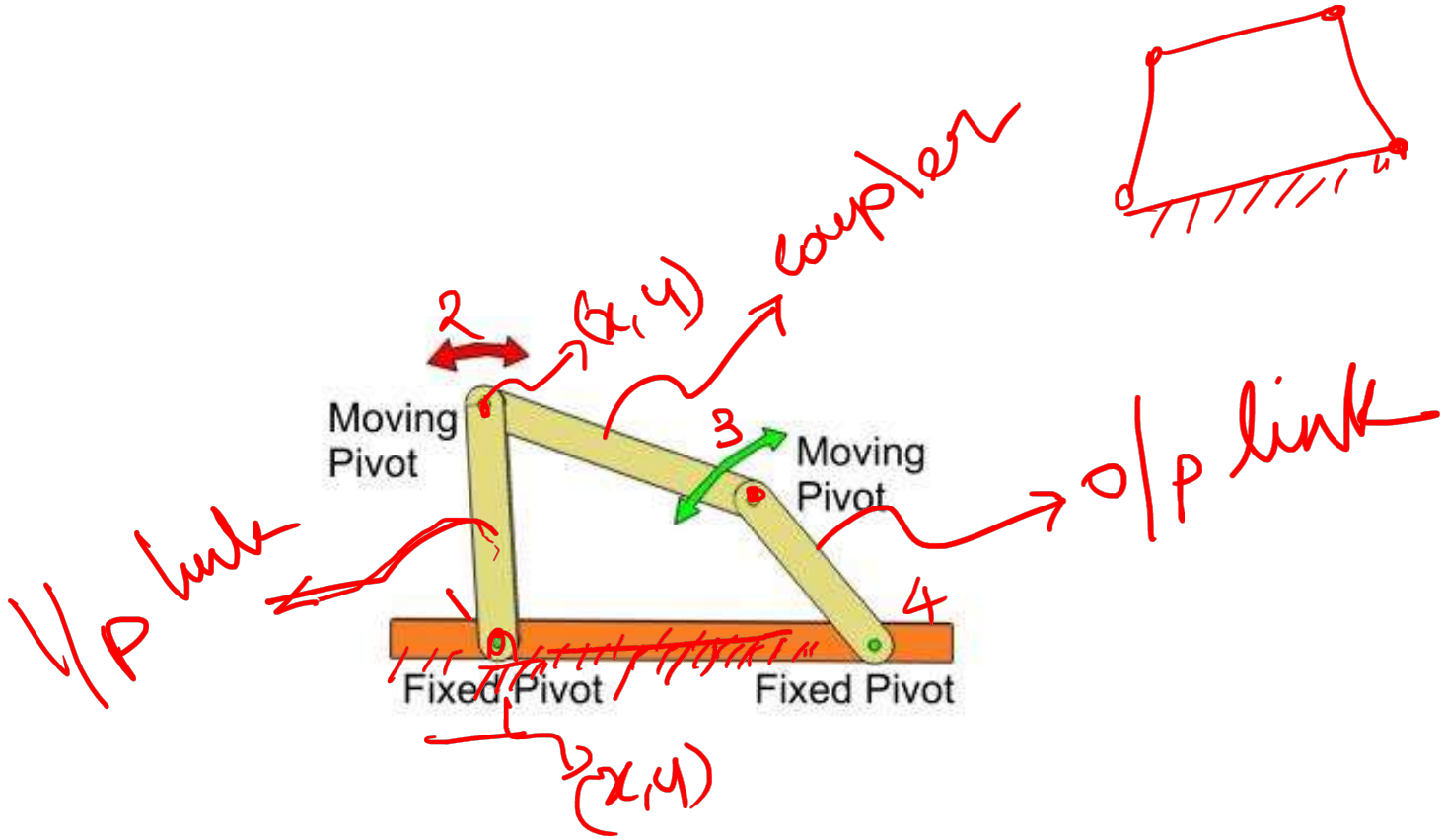

Four-bar Mechanisms

Sheet Metal Shear

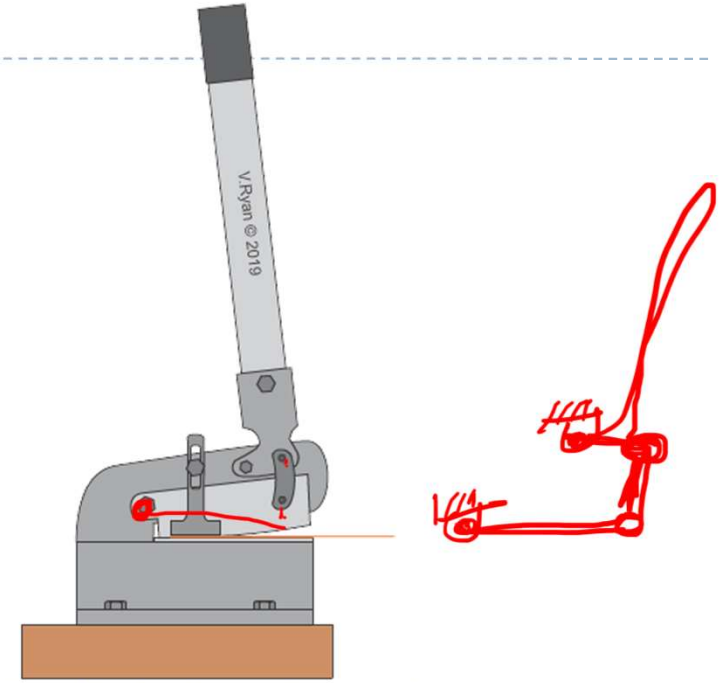

https://technologystudent.com/equip_flsh/shears1.html

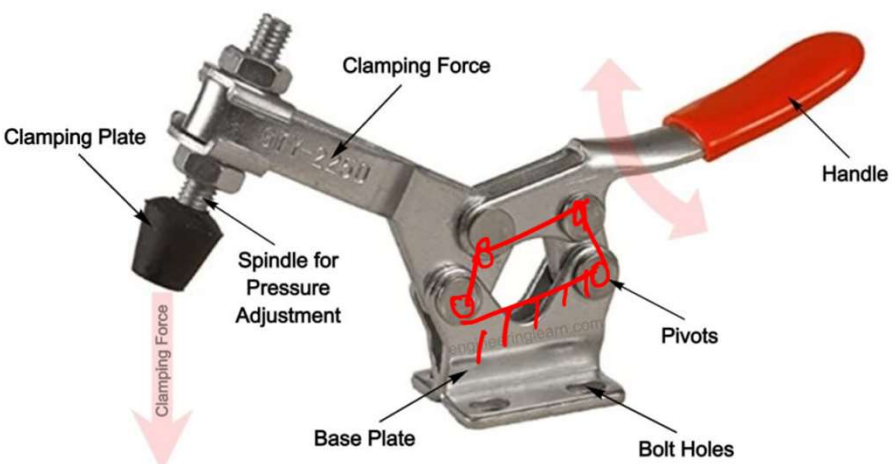

Toggle Clamp Mechanism

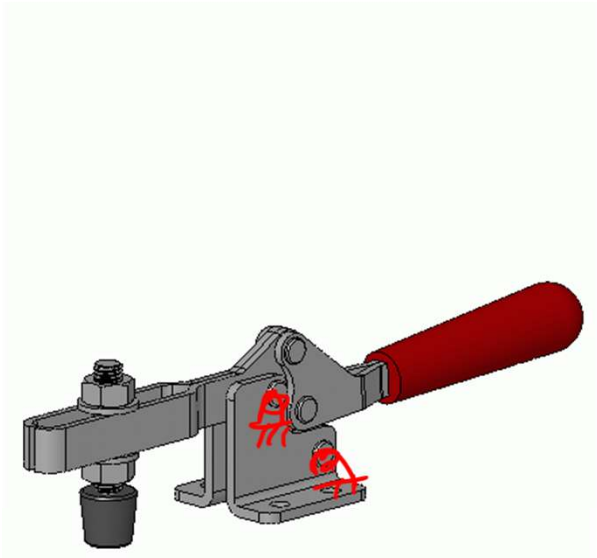

https://commons.wikimedia.org/wiki/File:Toggle-clamp_manual_horizontal_3D_animated.gif

Four-bar Mechanisms

Brake of a Wheelchair

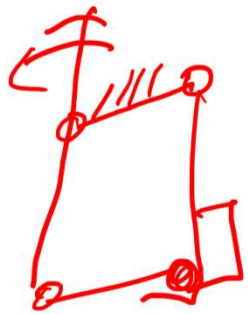

Folding Chair

Mechanisms

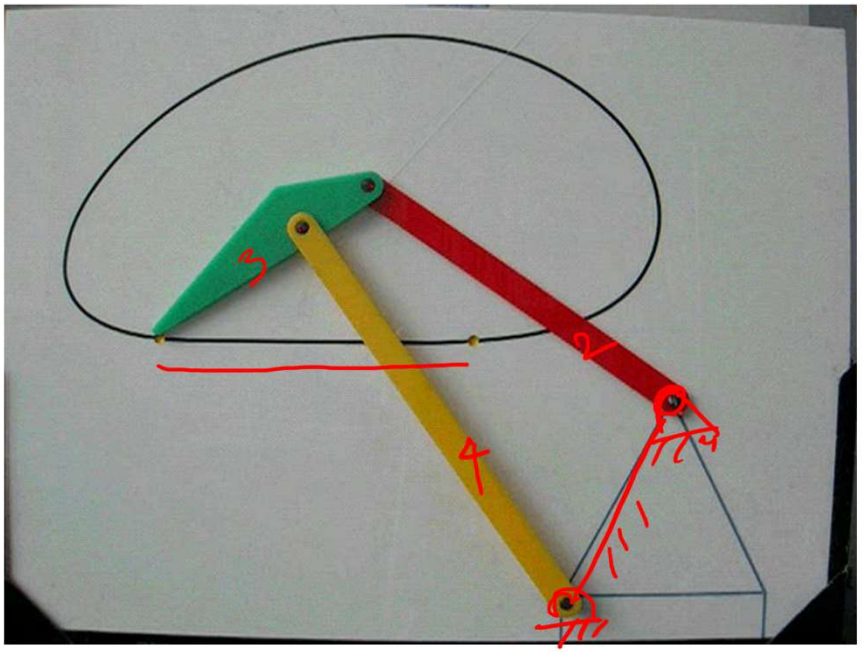

Straight line guiding for
a harbour crane

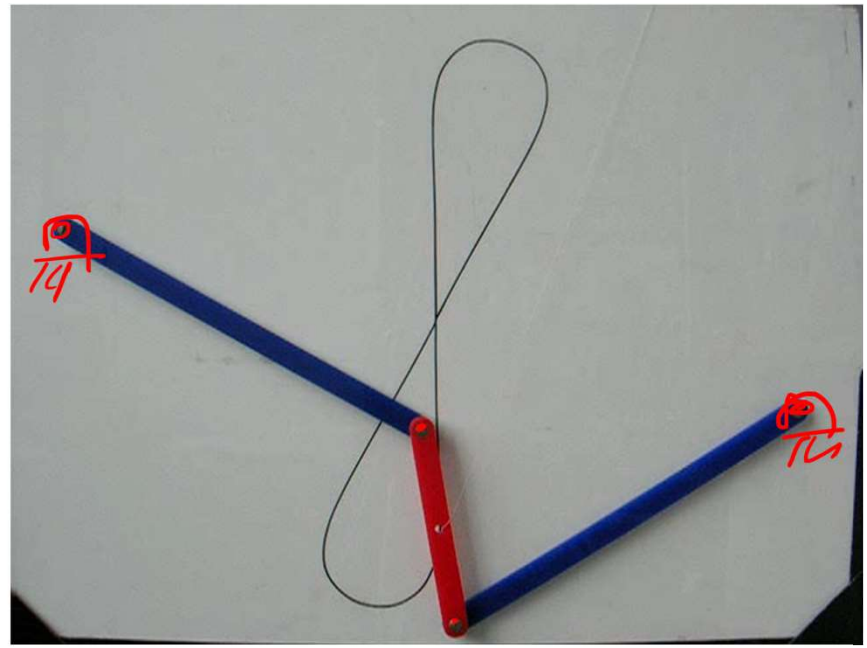

Straight line guiding
according Watt

https://mechanisms.antonkb.nl/

Skating

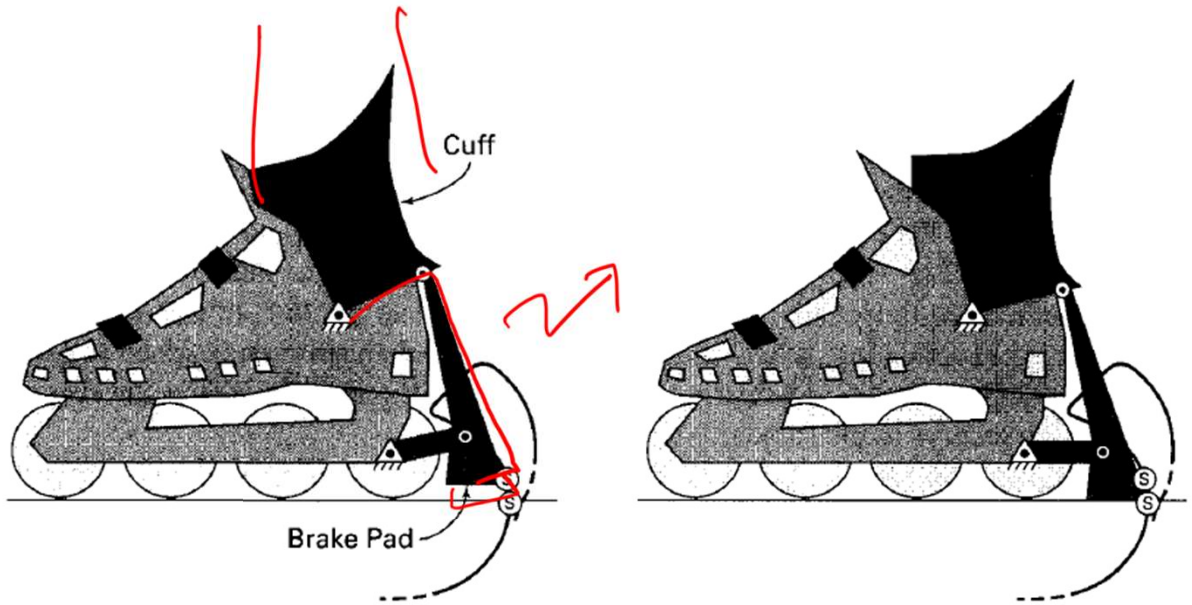

https://www.rollerblade.com/

Shovel/Powered shovel

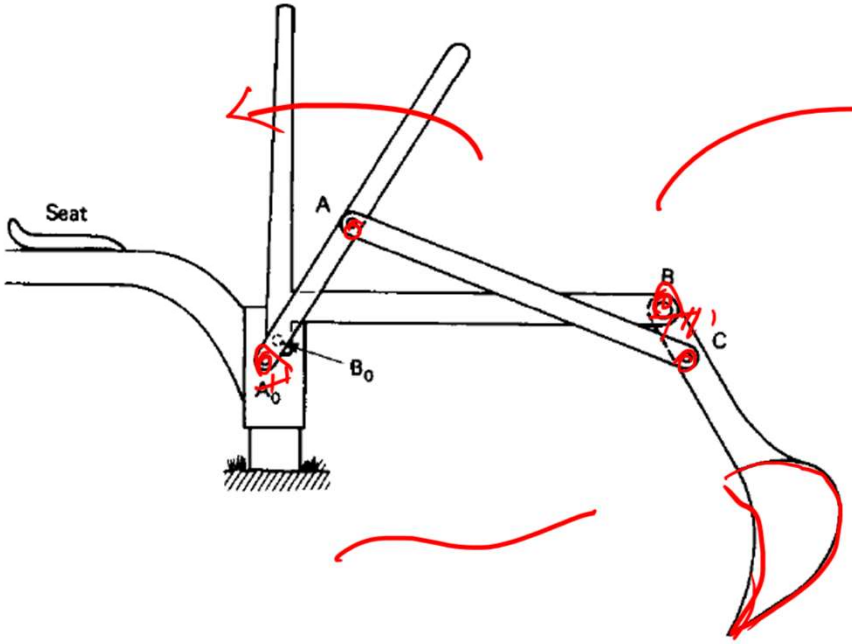

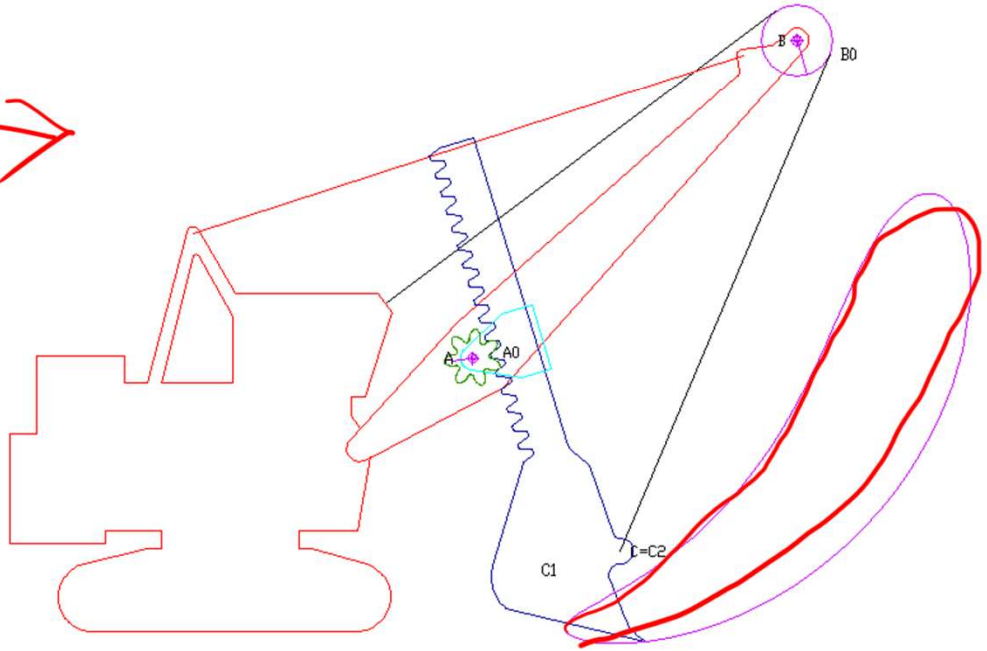

https://en.wikipedia.org/wiki/Power_shovel

Step to Ramp mechanism

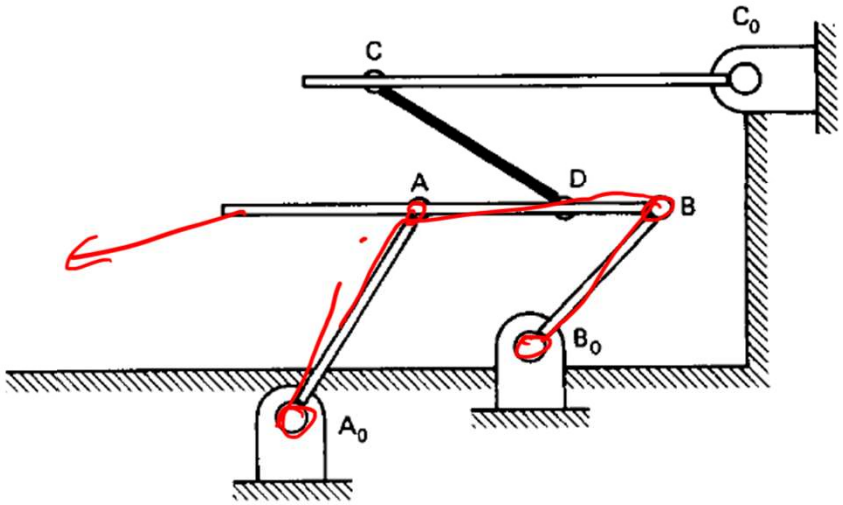

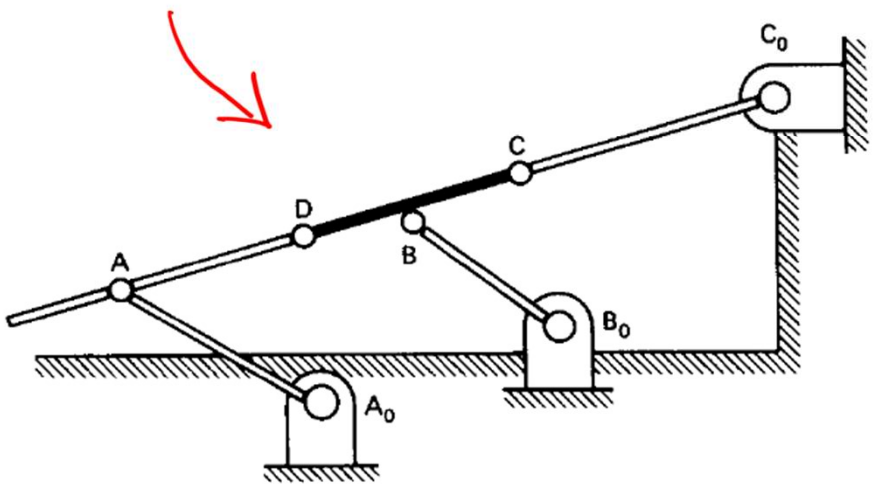

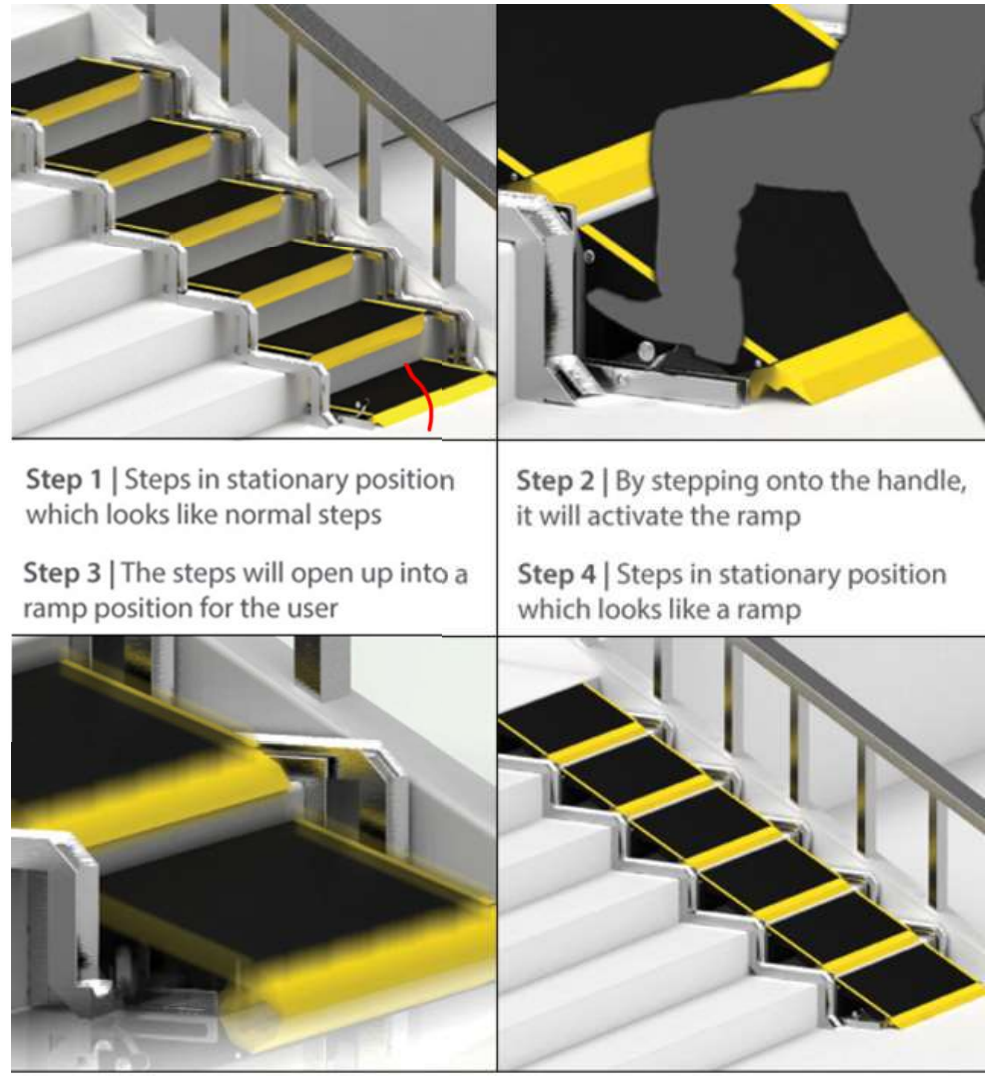

How does an Escalator work?
https://www.youtube.com/watch?v=1jfNIBtfWDY

Hidden Hinge Door

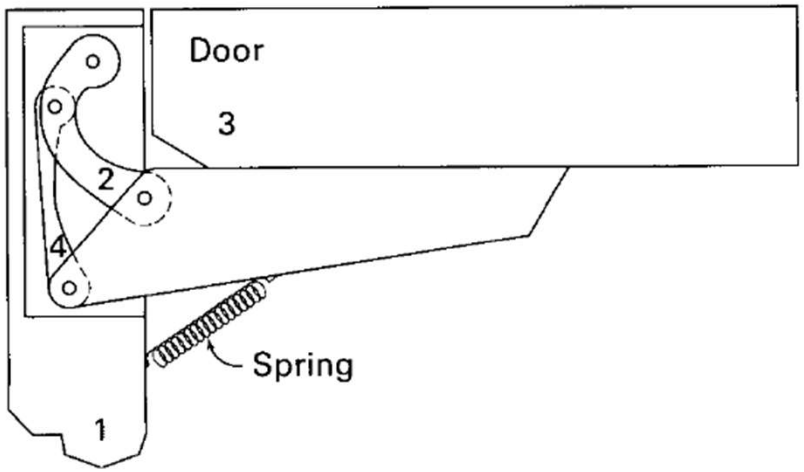

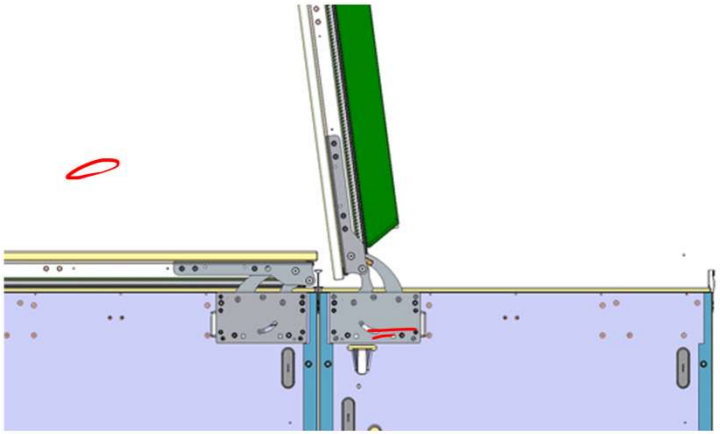

Planar Linkages

- instrument for duplicating a motion or copying a geometric shape to a reduced or enlarged scale.

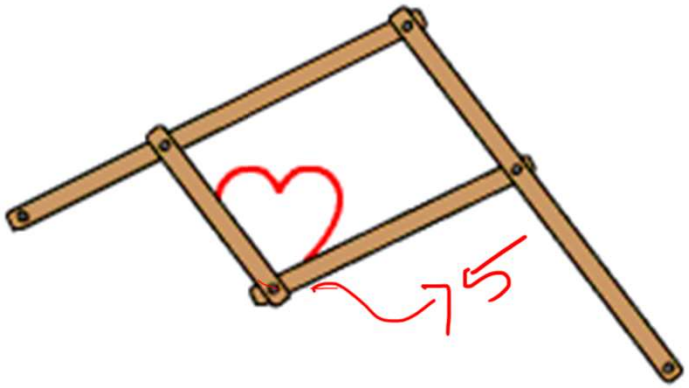

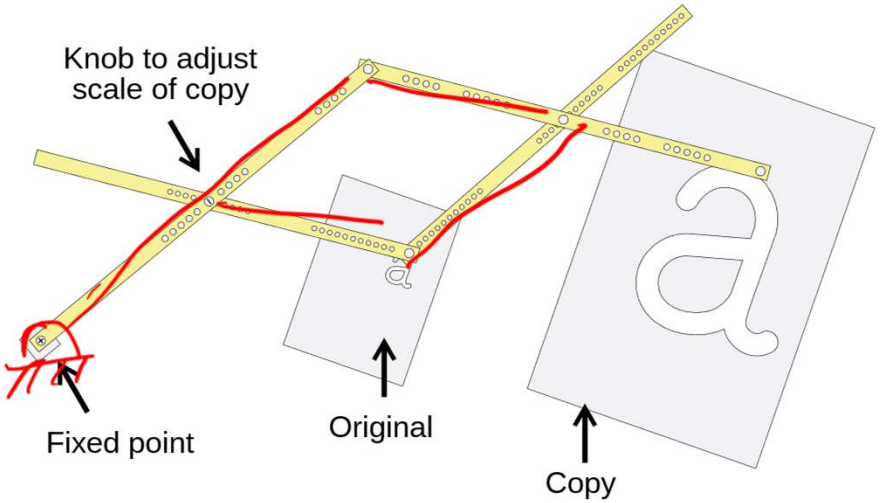

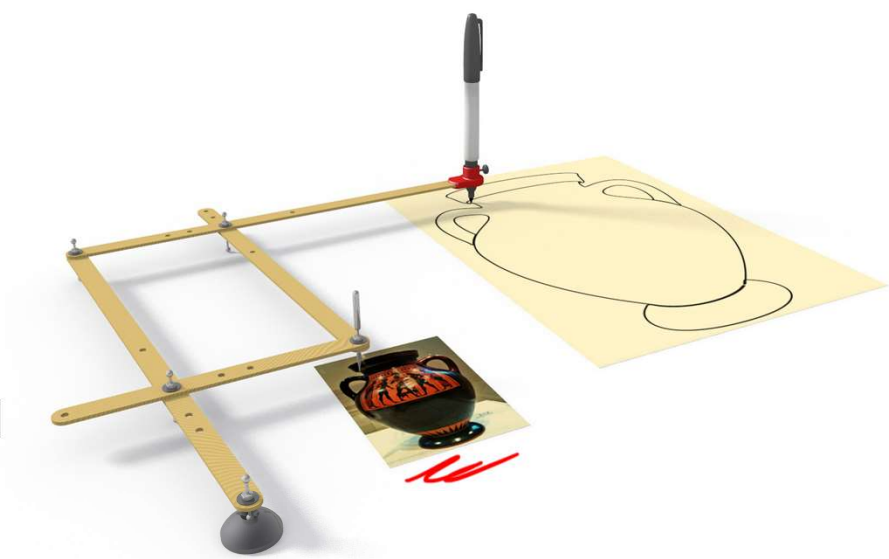

Pantograph used for scaling a picture. The red shape is traced and enlarged.

Forms of duplication in areas such as sculpture, engraving, and milling.

Planar Linkages

- Four-bar function generator approximating the function Log(u) for $1 < u < 10$.

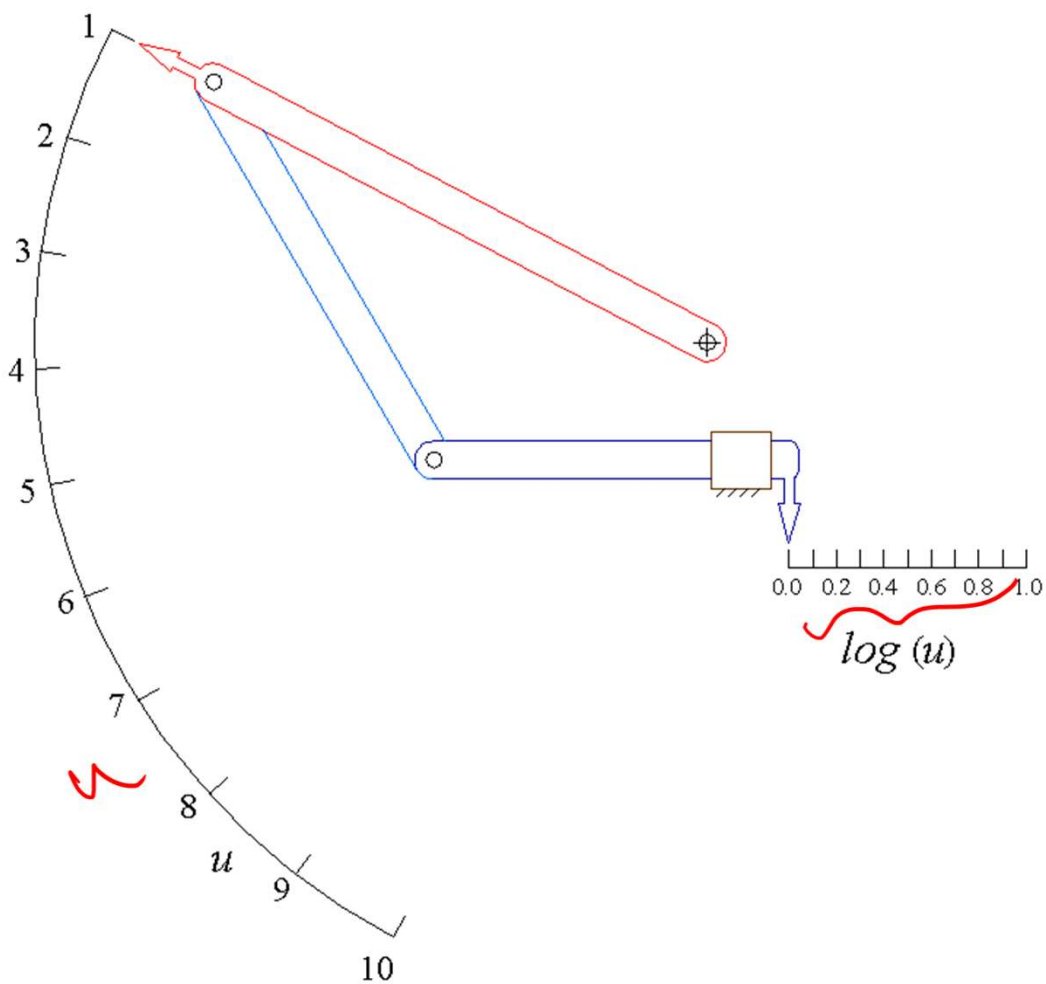

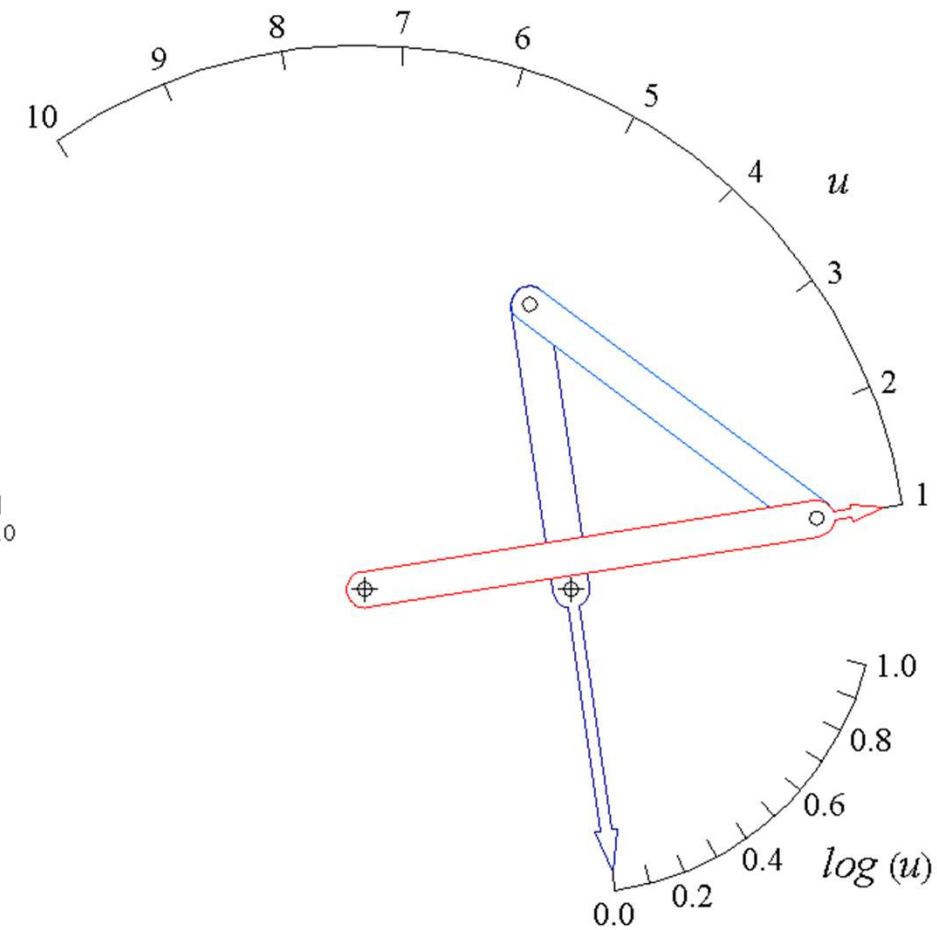

Planar Linkages – Landing Gears

- Open position to folded position.
- Stroke length vs folding angle
- What rate it should expand?
- How much force is required?

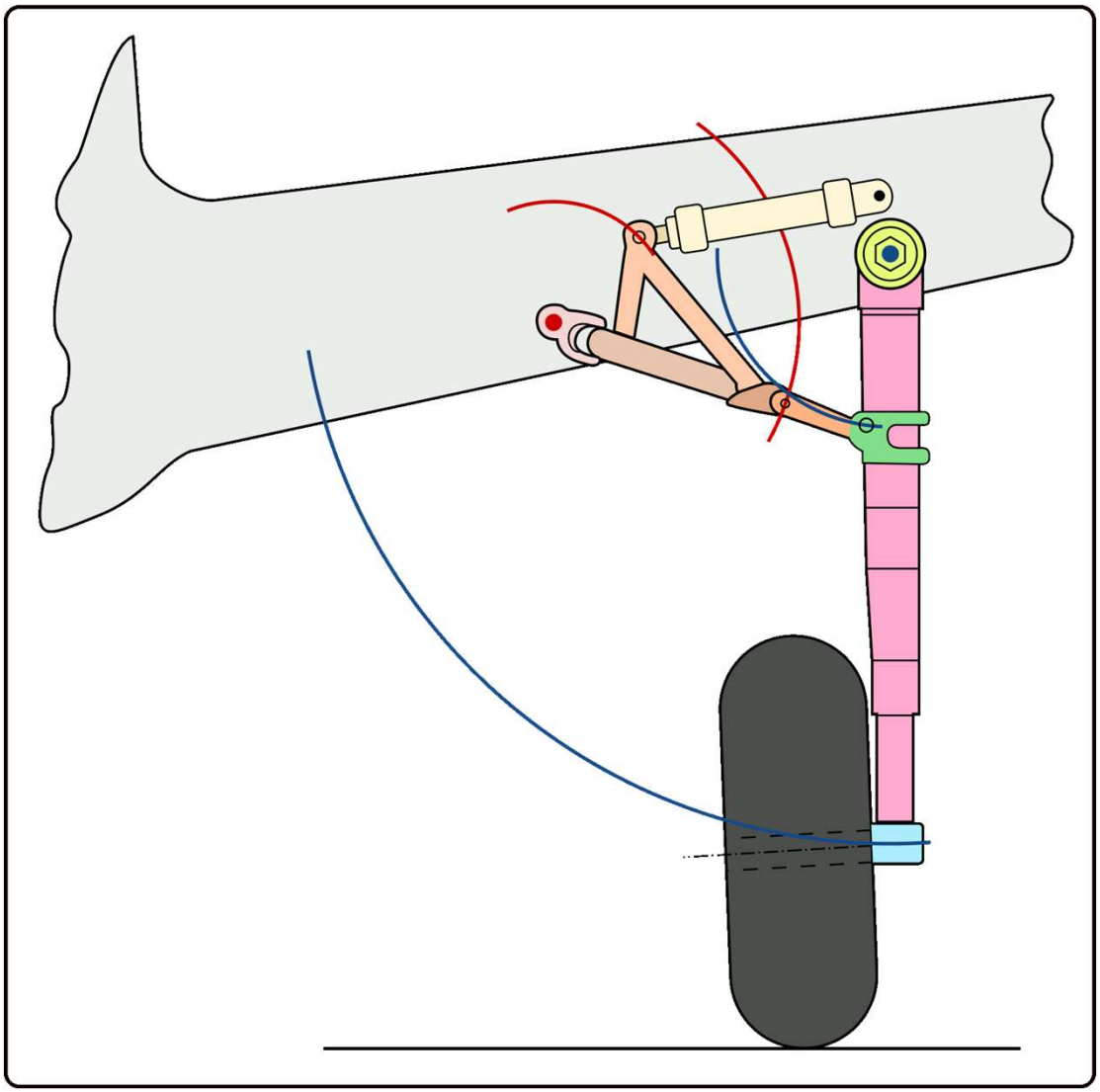

https://commons.wikimedia.org/wiki/File:Landing_gear_schematic-colored-animation.gif

Planar Linkages

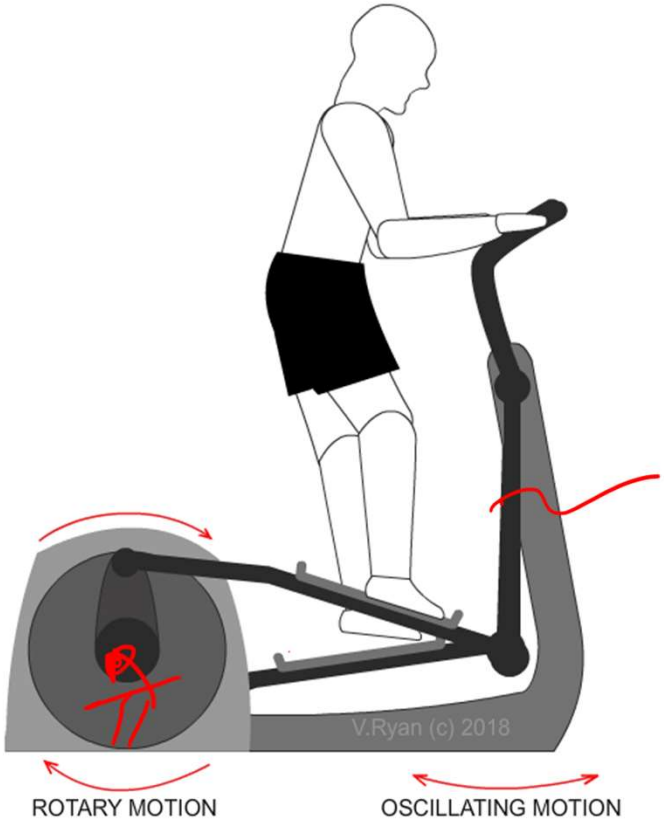

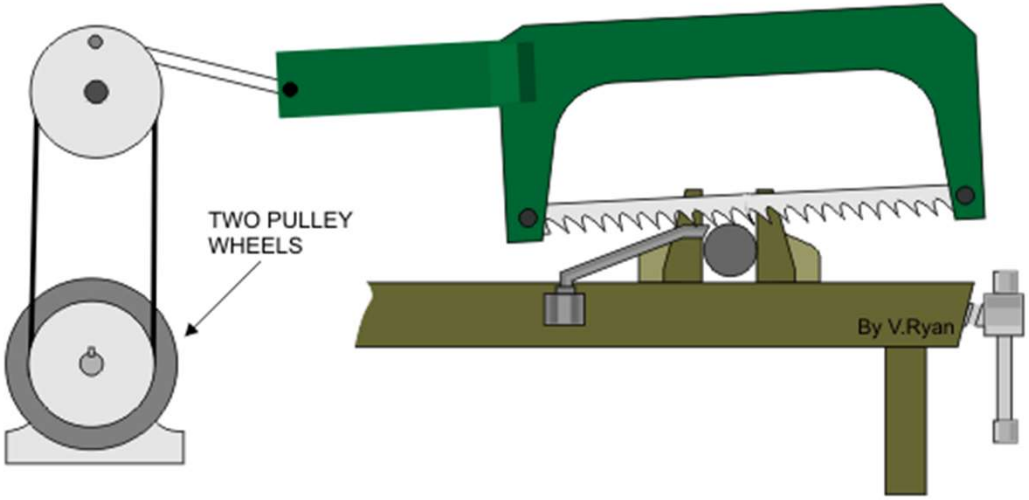

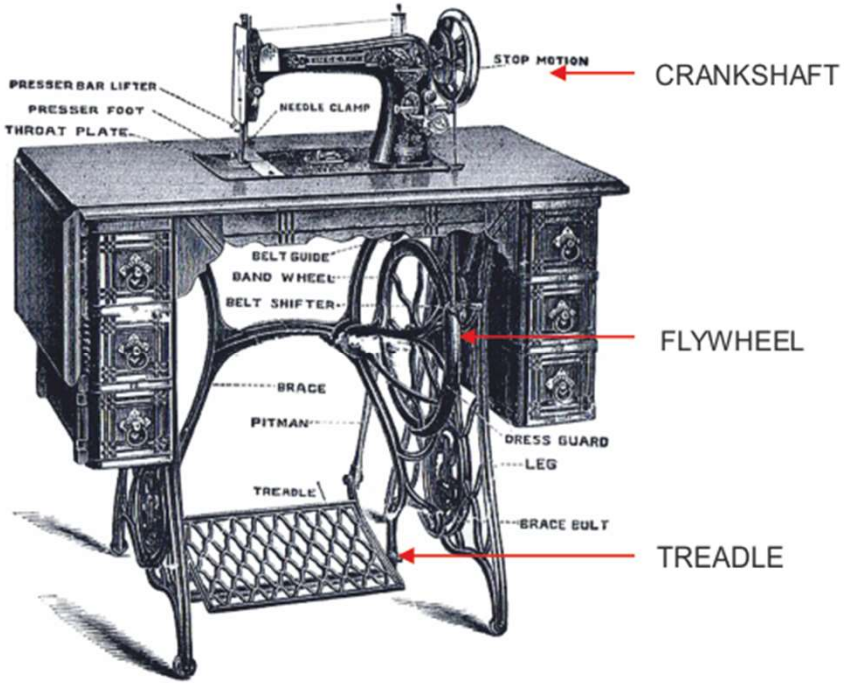

Spatial Linkages - Simulators

- Flight simulators, driving simulators

6DOF parallel manipulator

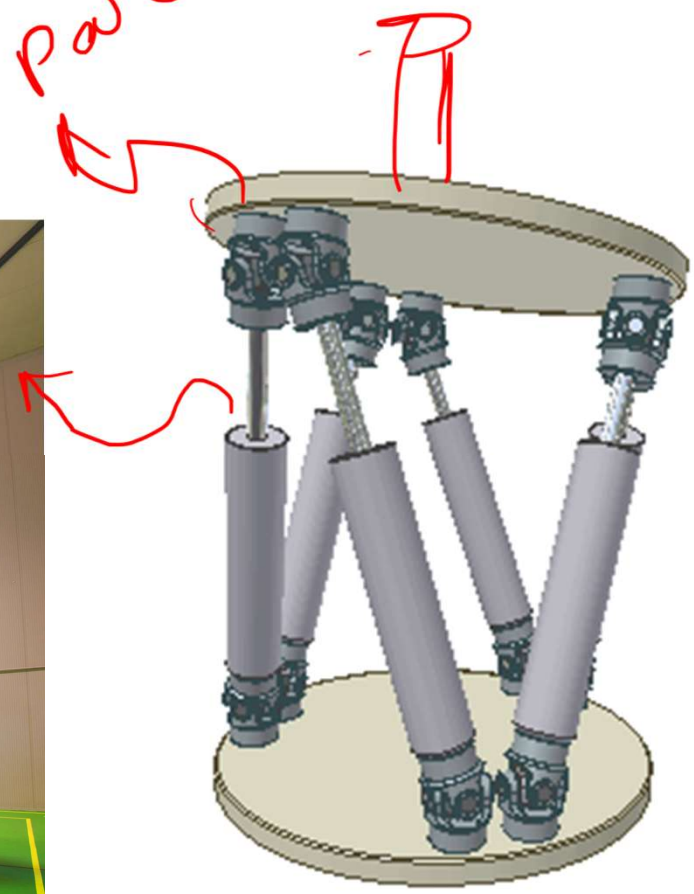

Example of a full flight simulator (FFS) with a 6-axis hexapod motion platform

Spatial Linkages

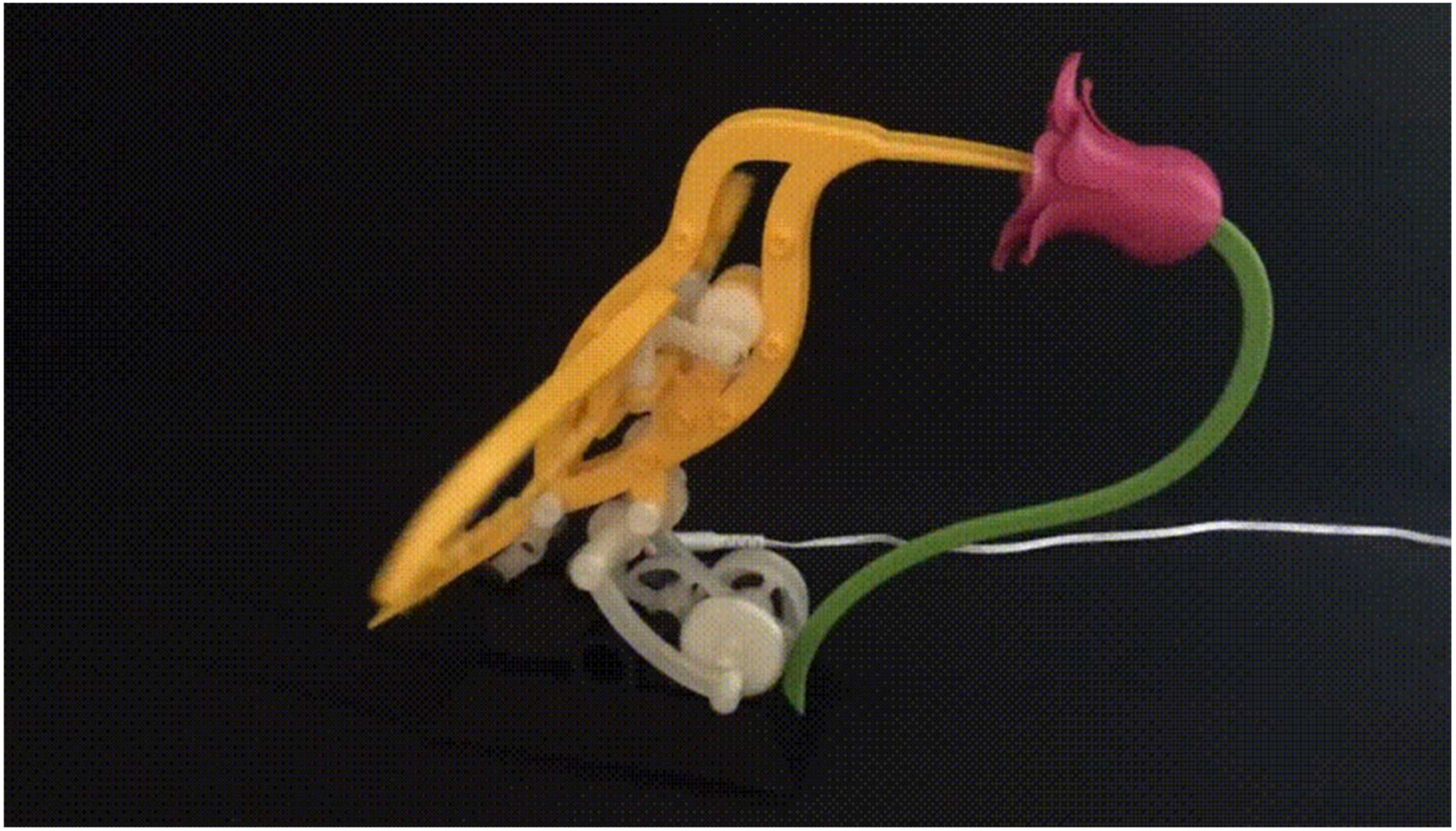

https://imgur.com/t/automata/xjfNpwr
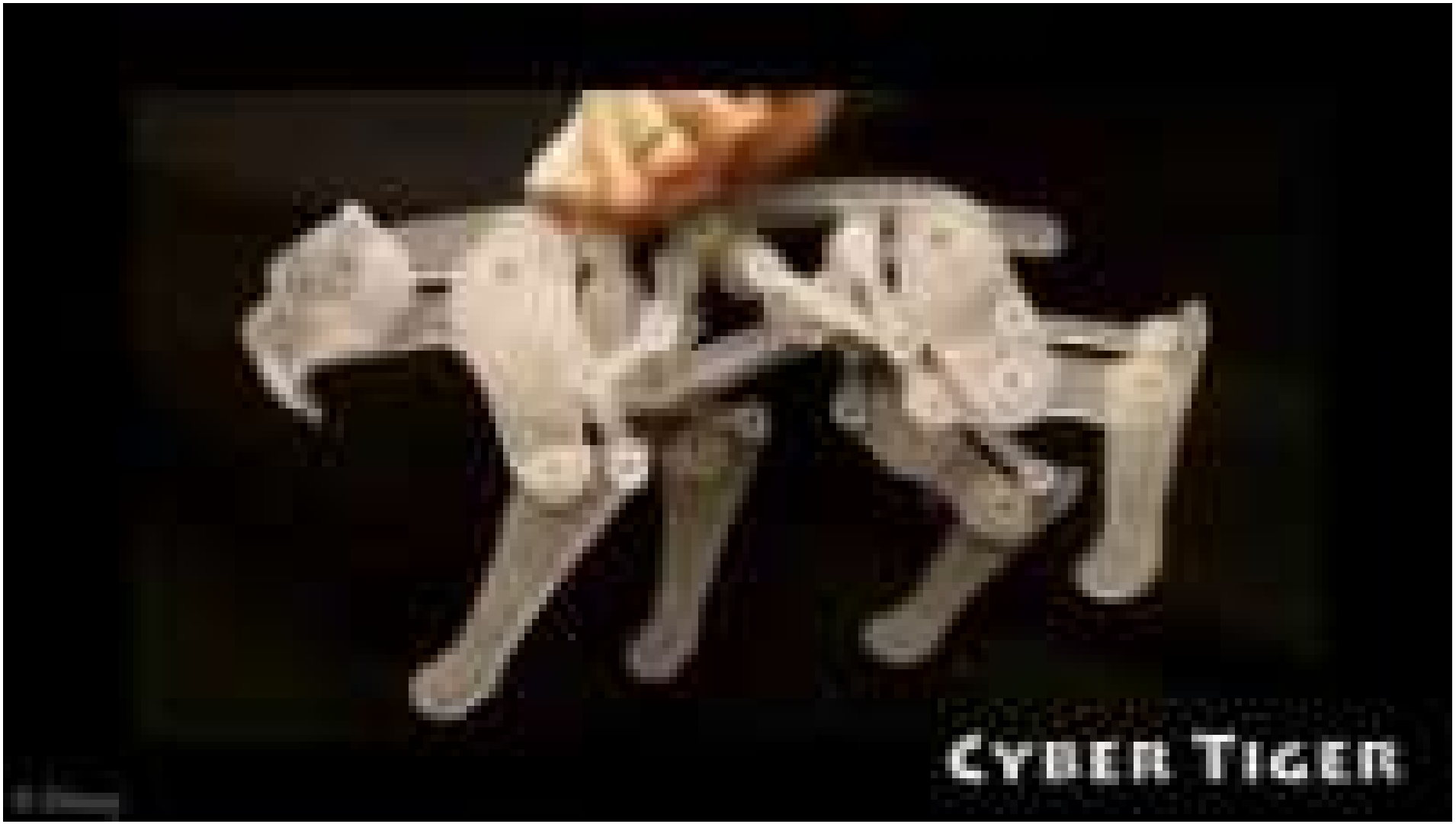
Interesting Applications