Kinematic Diagram

Hello!

N=1

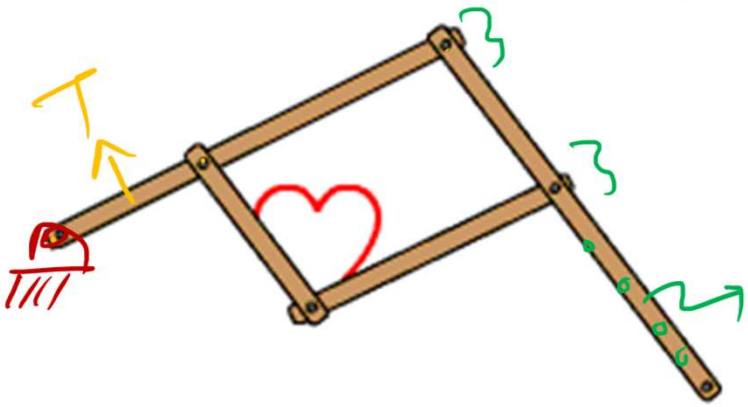

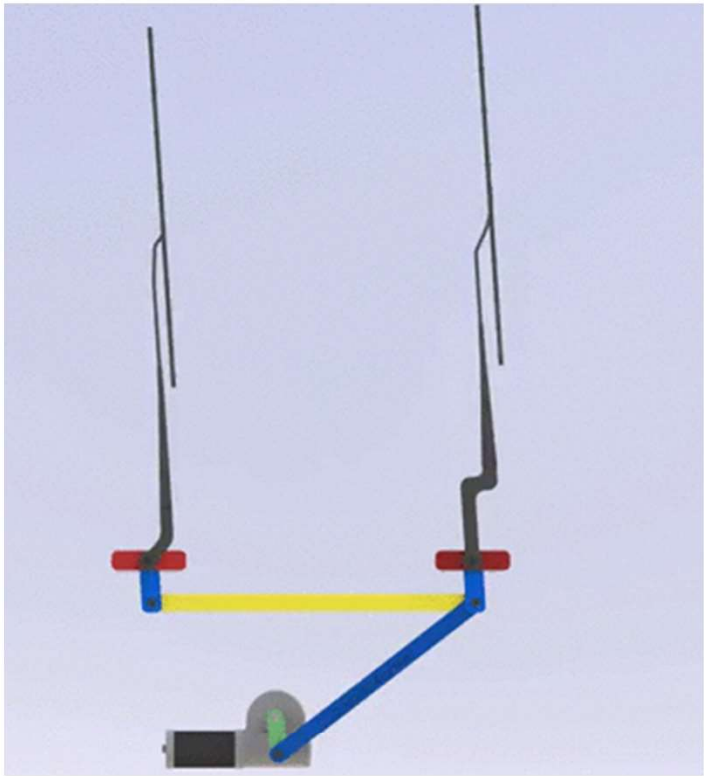

Pantograph

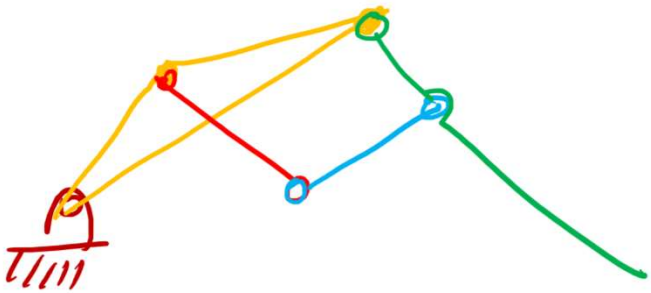

Kinematic Diagram

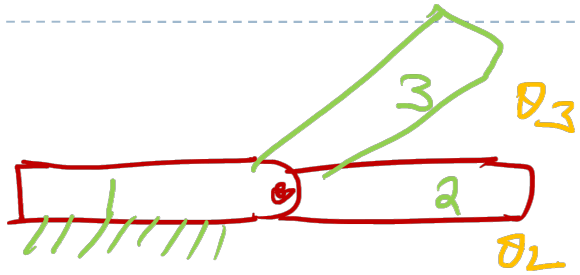

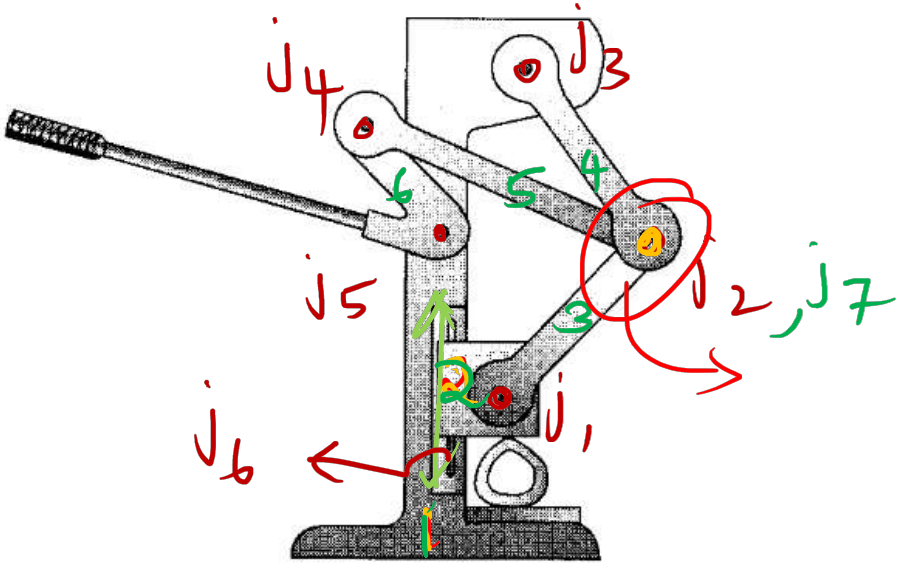

Simple press

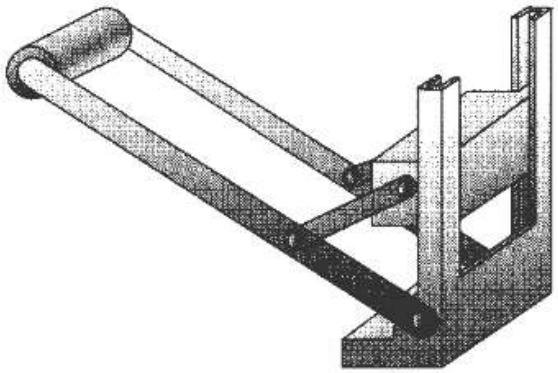

Can crusher

Kinematic Diagram

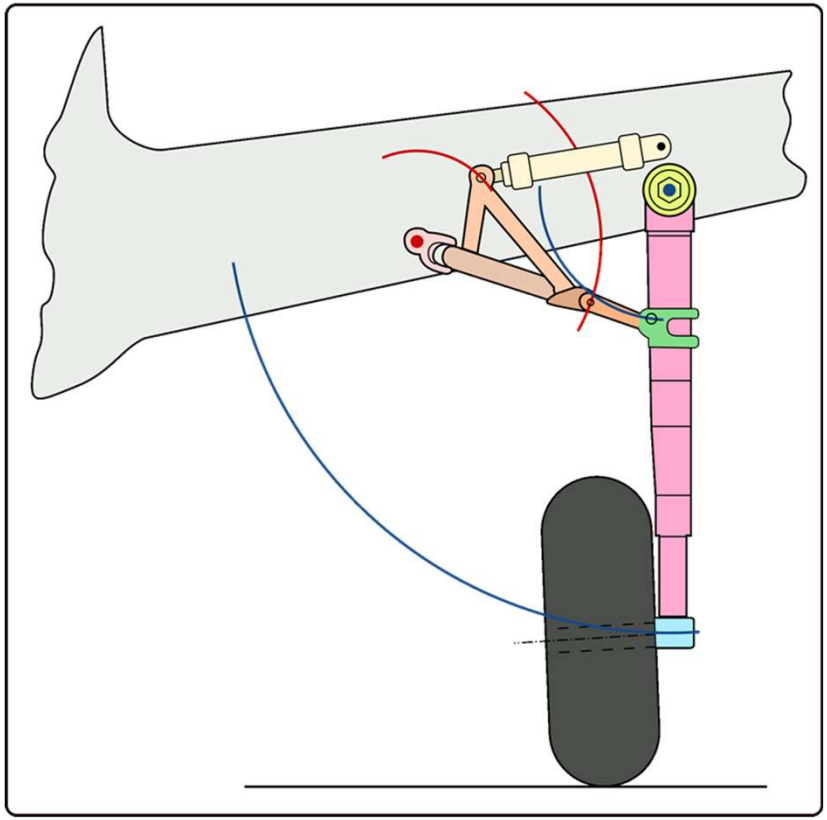

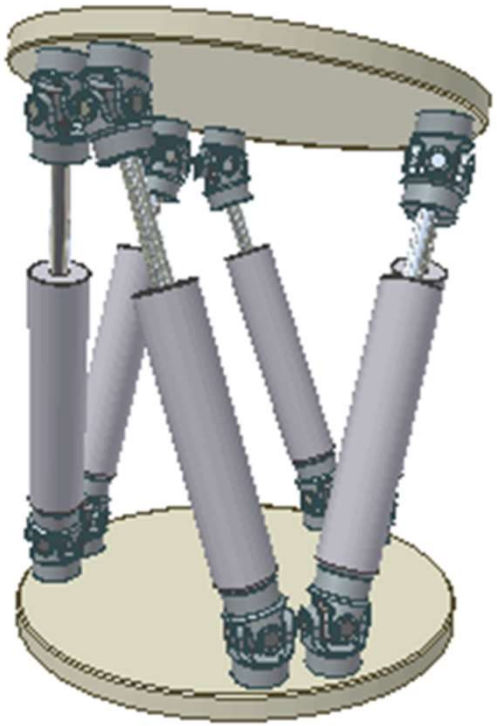

Degree of Freedom in Planar Mechanisms

→ the min no. of independent variables required to specify the complete configuration of the mechanism.

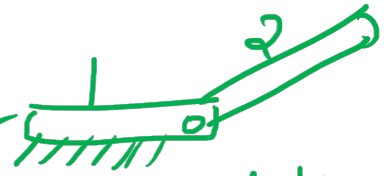

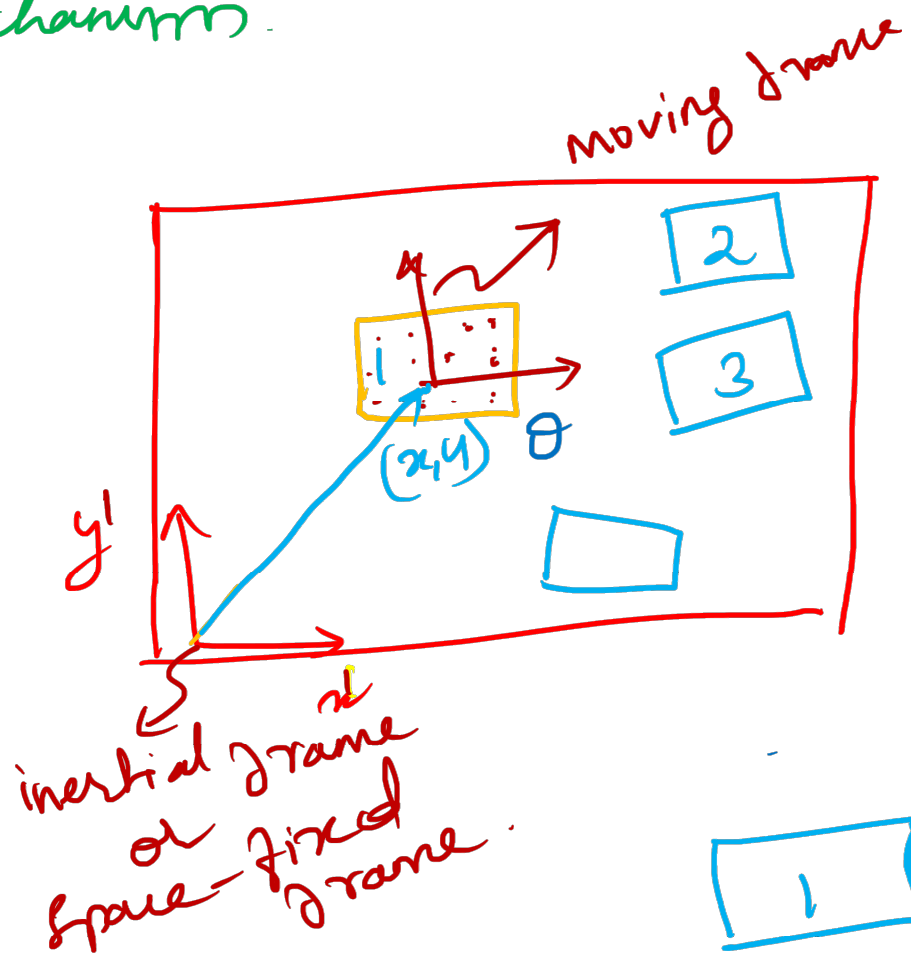

(x, y, θ)

$3N$

→ no. of rigid bodies

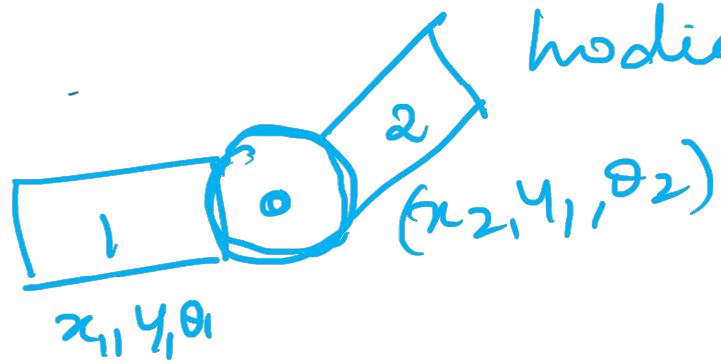

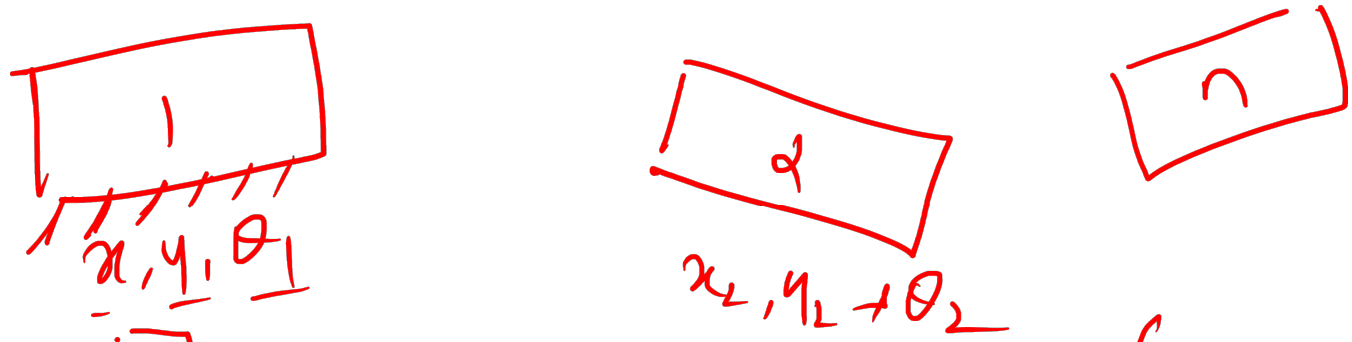

6

$$DOF = [3N - 3 - 2j_1]$$

$$= 3(N-1) - 2j_1$$

$N = 2$

$j_1 = 1$

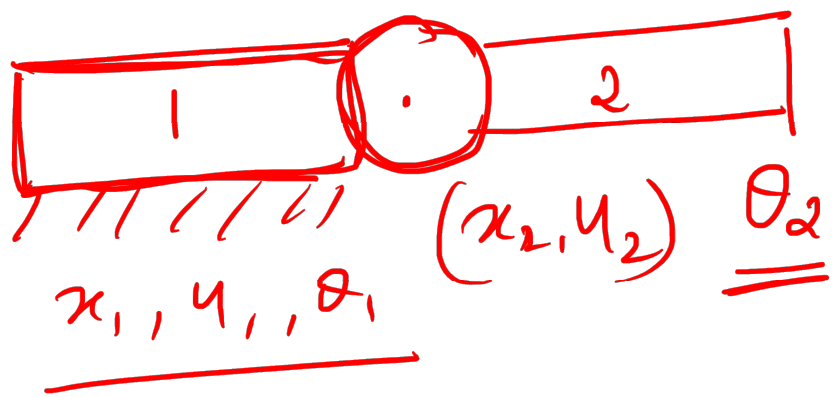

$DOF = 1$

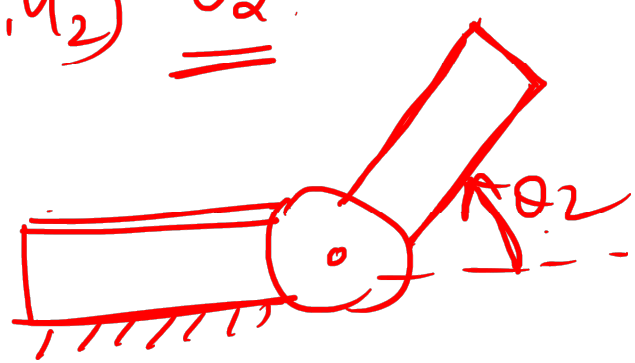

$$DOF = 3(N-1) - 2j_1$$

Degree of Freedom in Planar Mechanisms

- **Gruebler condition:** to investigate the DoF of any assembly of linkages

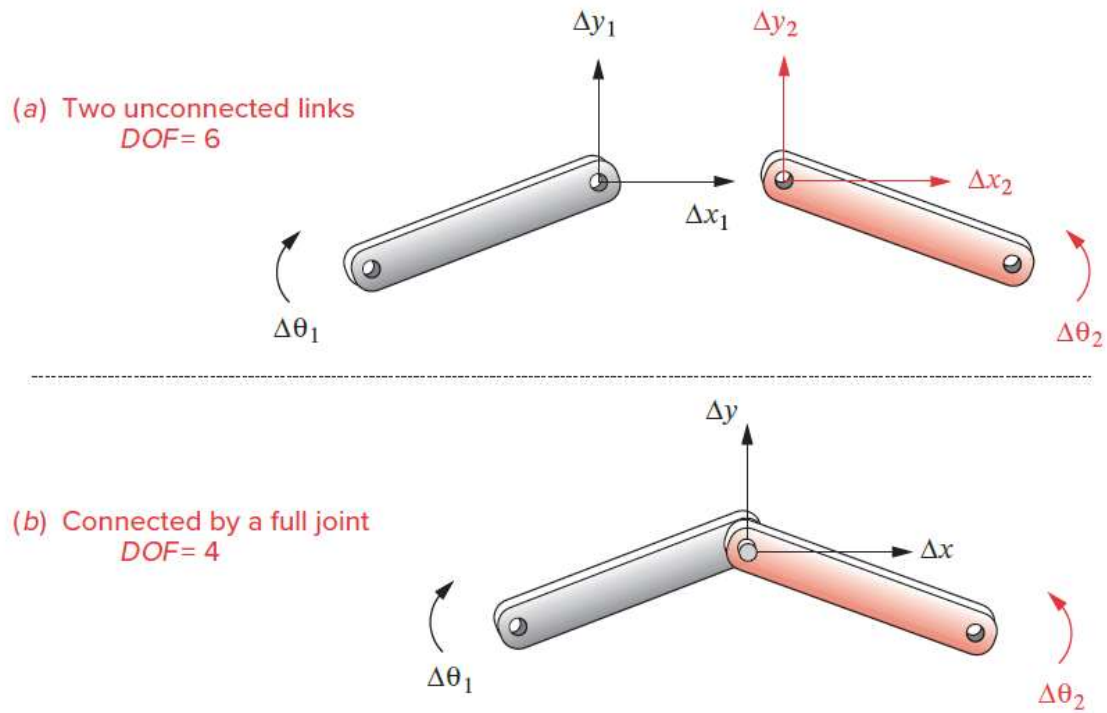

$$M = 3(N-1) - 2J_1$$

- Kutzbach's modification of Gruebler's equation is

$$M = 3(N-1) - 2J_1 - J_2$$

$$J_1 = \text{no. of 1DOF joints}, J_2 = \text{no. of half joints}$$

Degree of Freedom in Planar Mechanisms

- Half joint equivalent

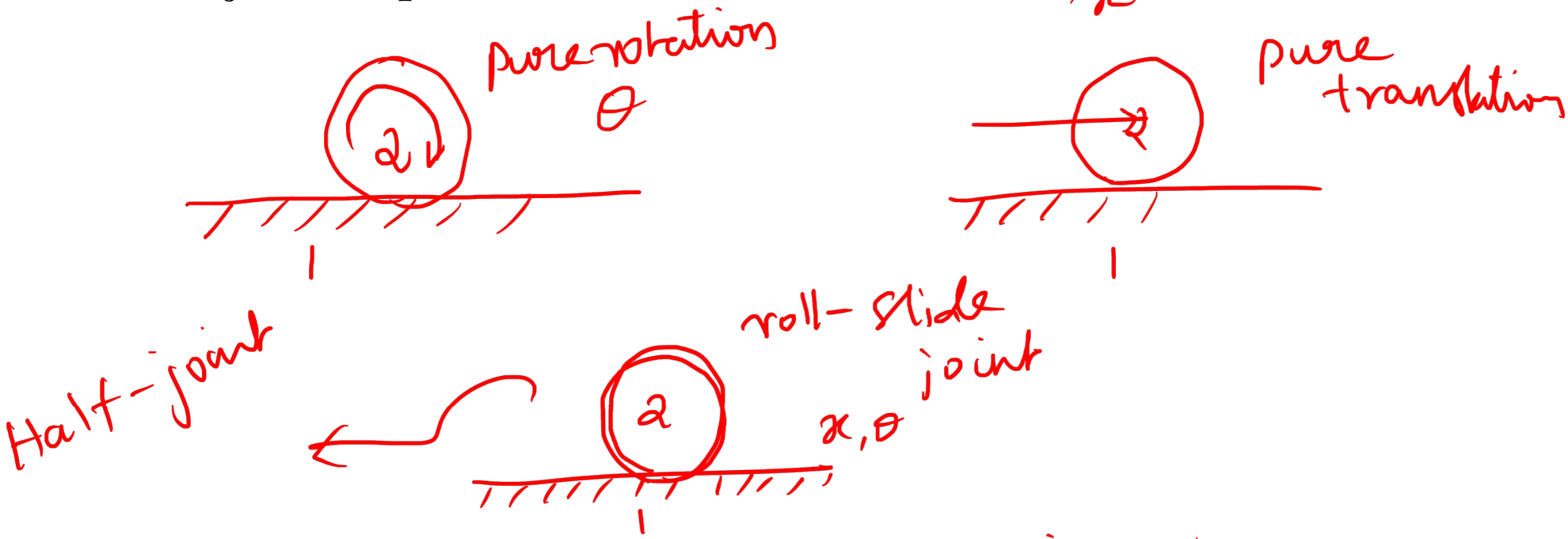

$$M = 3(N-1) - 2j_1 - j_2$$

Planar Kinematic Pairs

- Pin (Revolute)

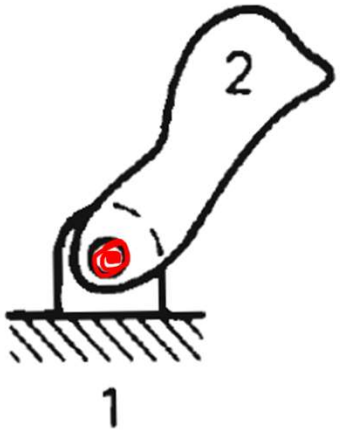

$N = 2$

$j_1 = 1$

$j_2 = 0$

$M = 3(N-1) - 2j_1$

$= 1$

Planar Kinematic Pairs

- Slider (Prismatic joint)

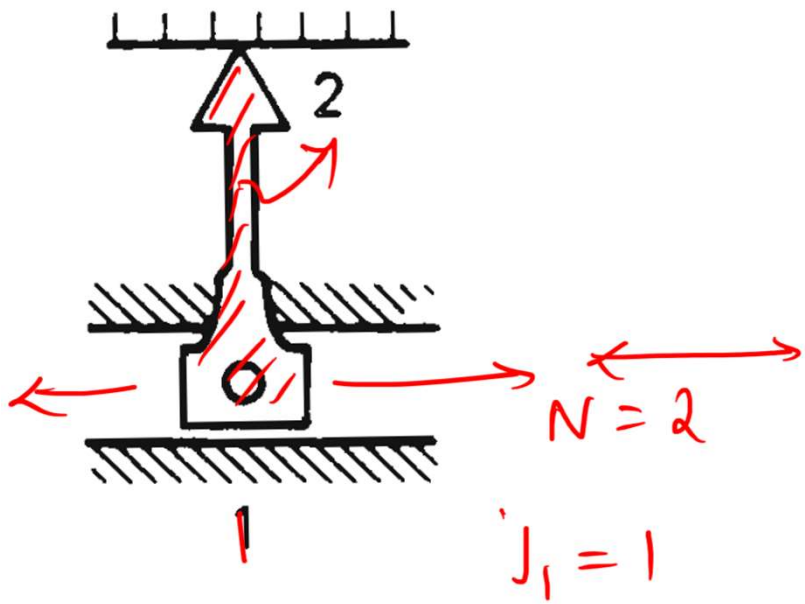

$\simeq$

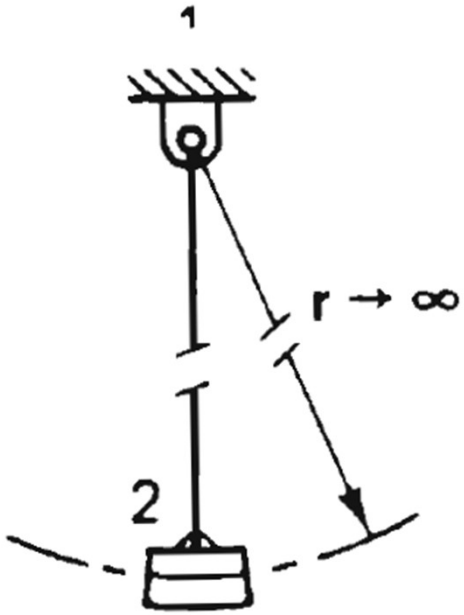

Planar Kinematic Pairs

- Rolling contact (No sliding)

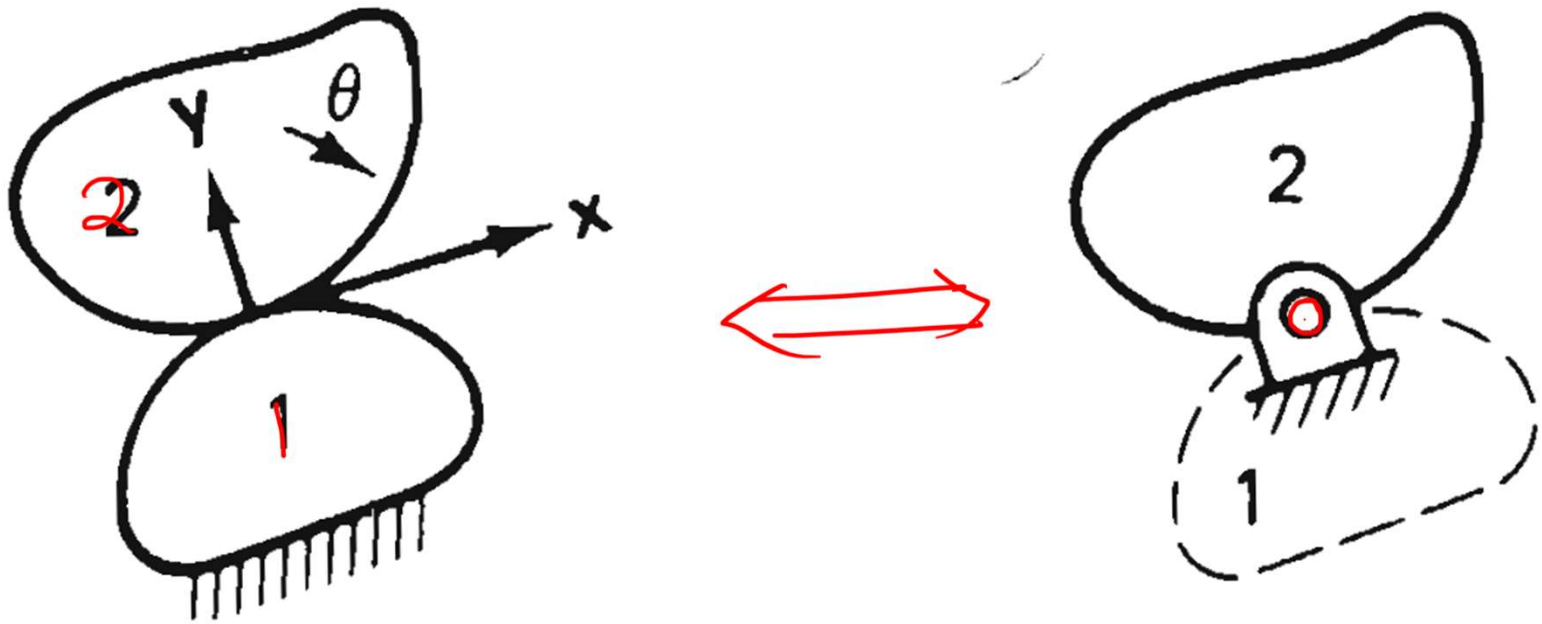

$N = 2$

$J_1 = 1$

Planar Kinematic Pairs

- Roll-Slide Contact

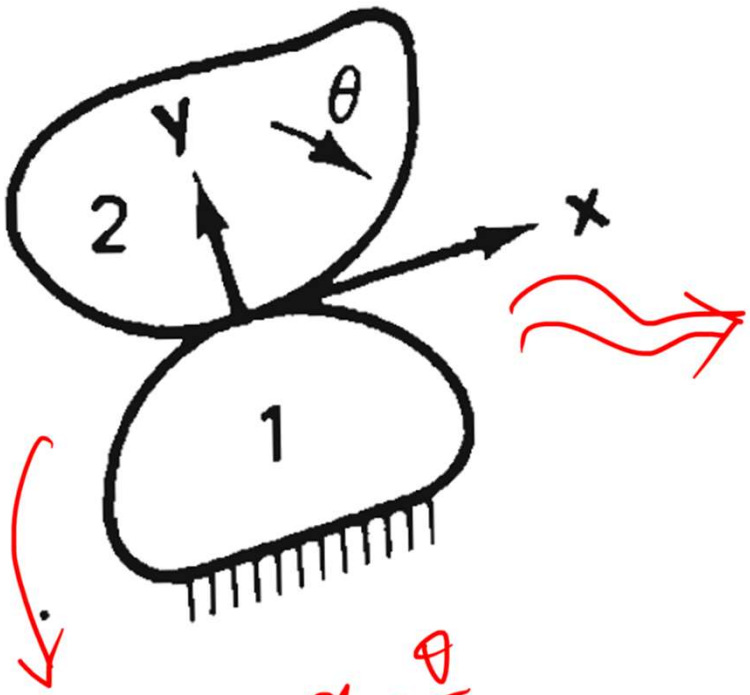

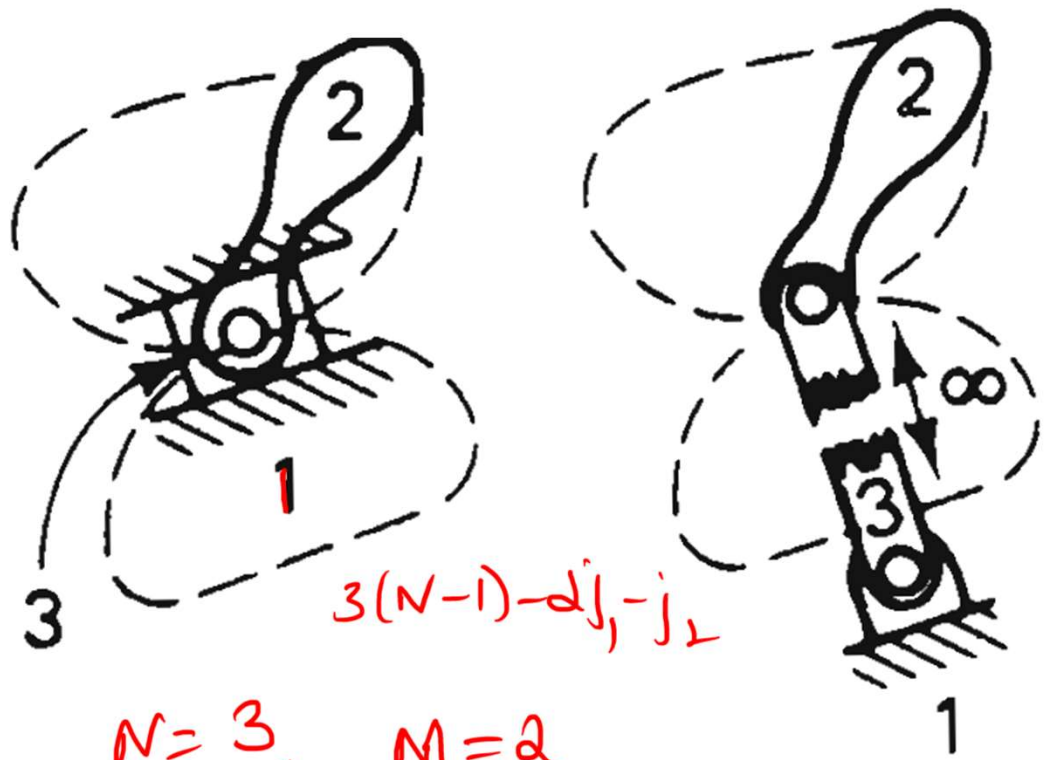

$3(N-1)-2j_1-j_2$

x, θ

$N=2 \quad M=2$

$j_1=0$

$j_2=1$

$N=3 \quad M=2$

$j_1=2$

$j_2=0$

Planar Kinematic Pairs

- Gear Contact (Includes roll-slide contact between gear-teeth and rolling contact between pitch circles)

$N = 3$

$j_2 = 1$

$j_1 = 2$

$M = 3(N-1) - 2j_1 - j_2$

$M = 1$

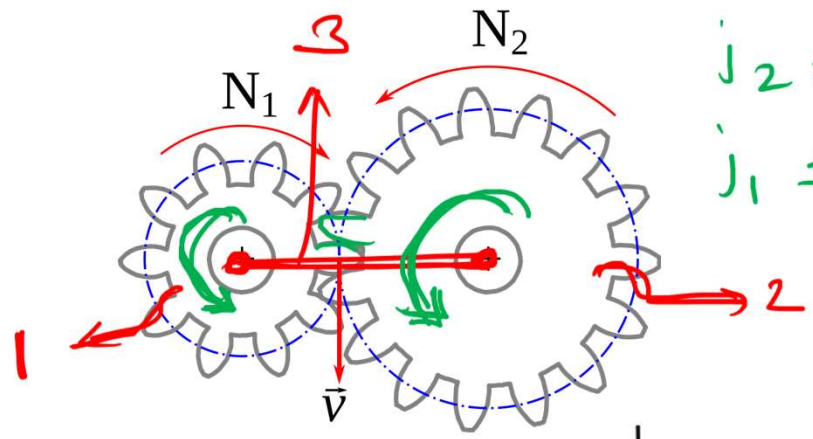

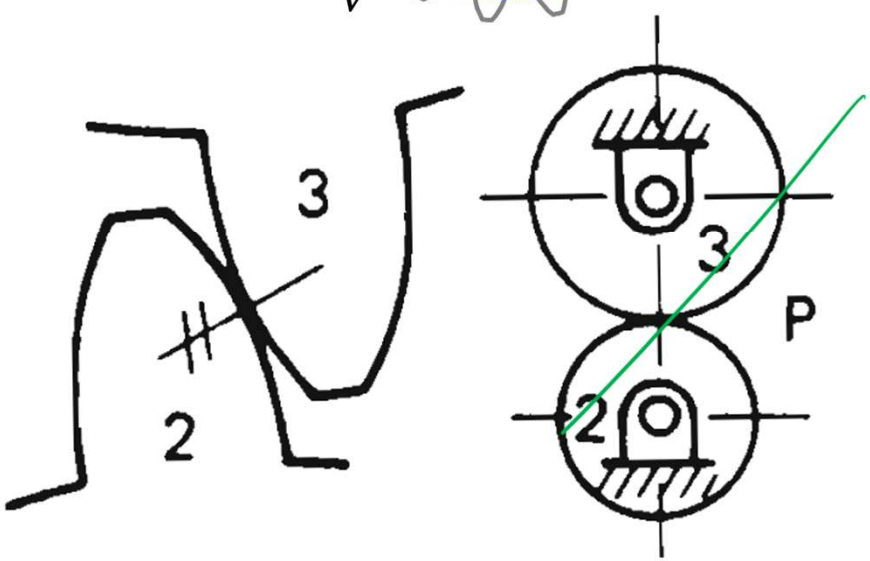

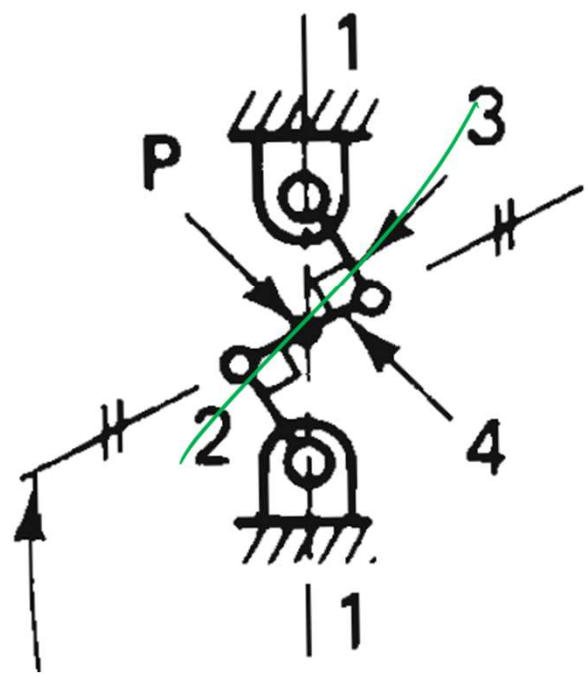

Planar Kinematic Pairs

- Spring

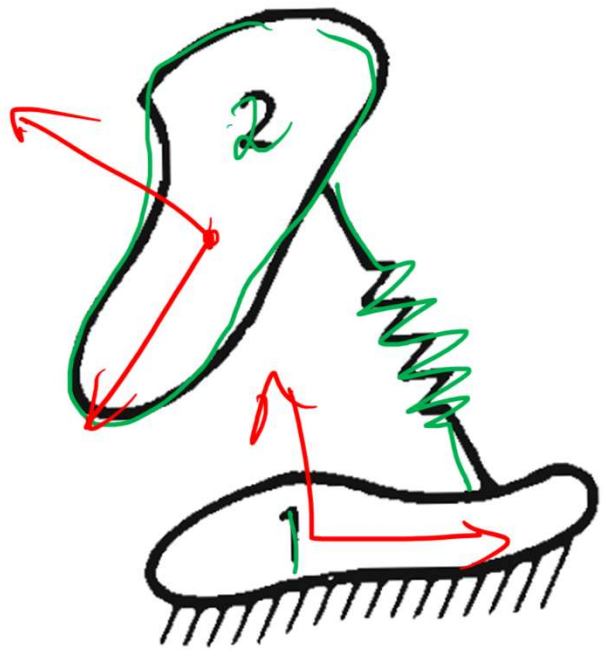

$N = 2$

$J_1 = 0$

$j_2 = 0$

$M = 3$

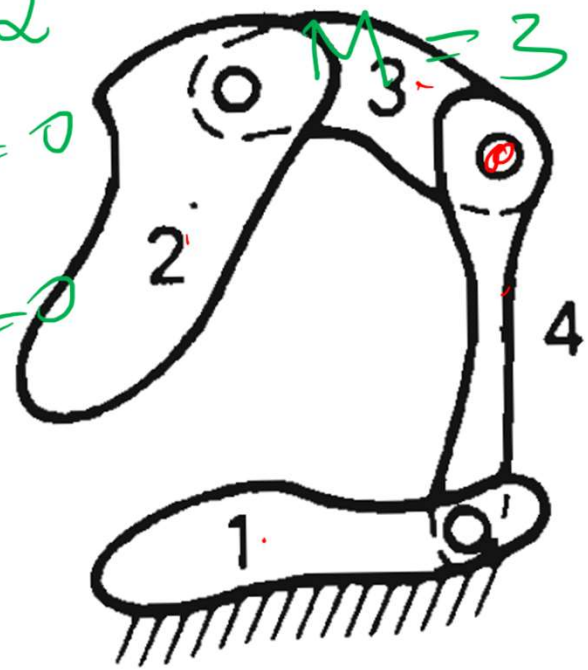

$N = 4$

$j_1 = 3$

$M = 3$

- Belt and pulley (no sliding) or chain and sprocket

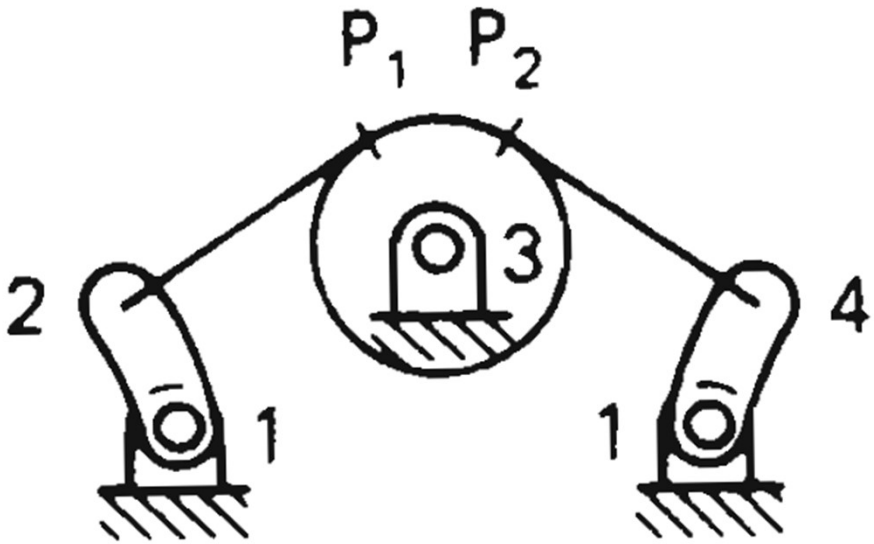

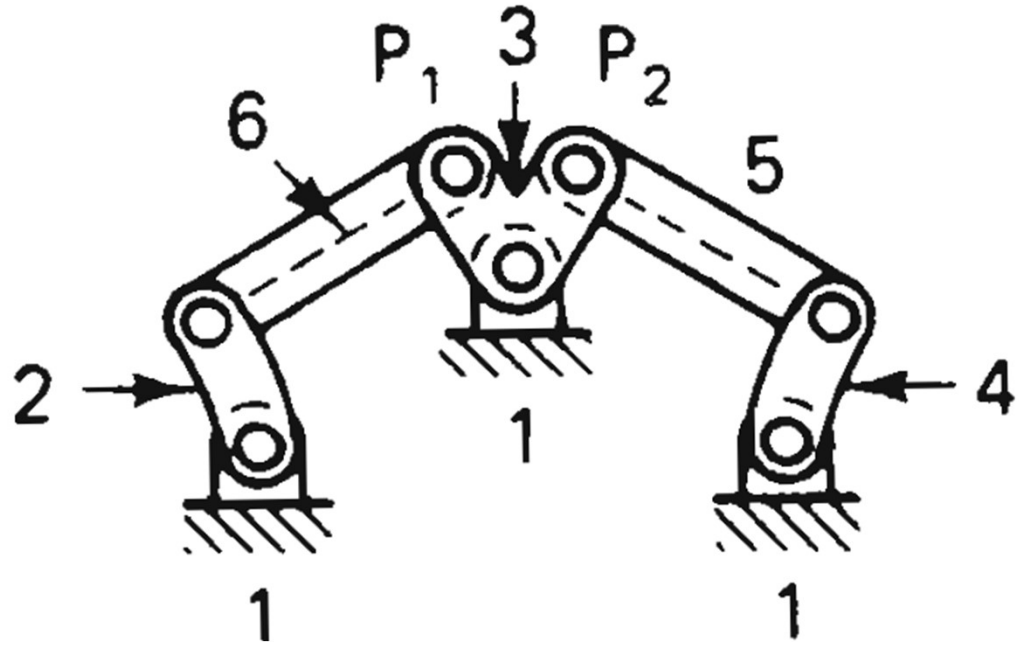

- P1 and P2 Points of tangency of approaching and receding belt

Cam Mechanism

- The rotation of the follower roller (4) does not affect the output oscillation of the arm (3)

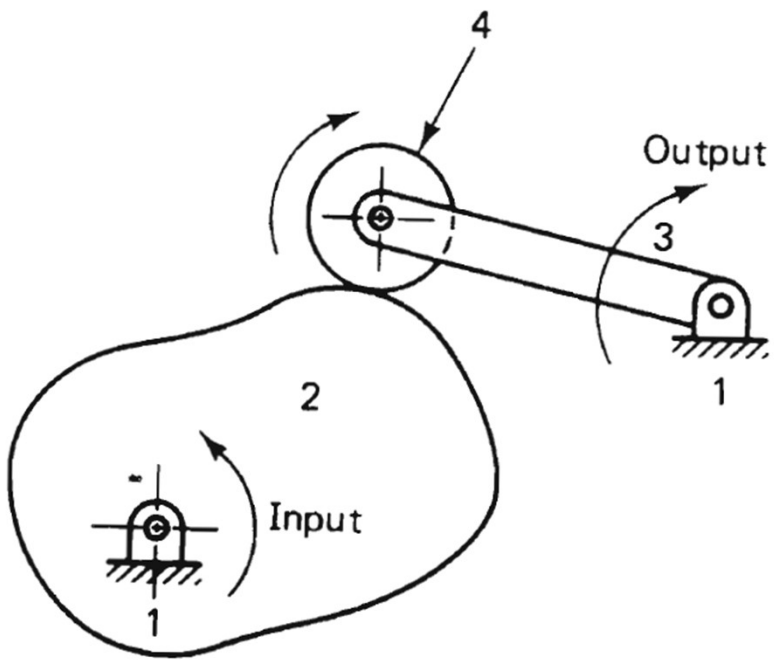

- If we weld roller 4 to arm 3

- If slipping is prevented by friction, the contact becomes rolling

Degree of Freedom (Mobility) in Spatial Mechanisms

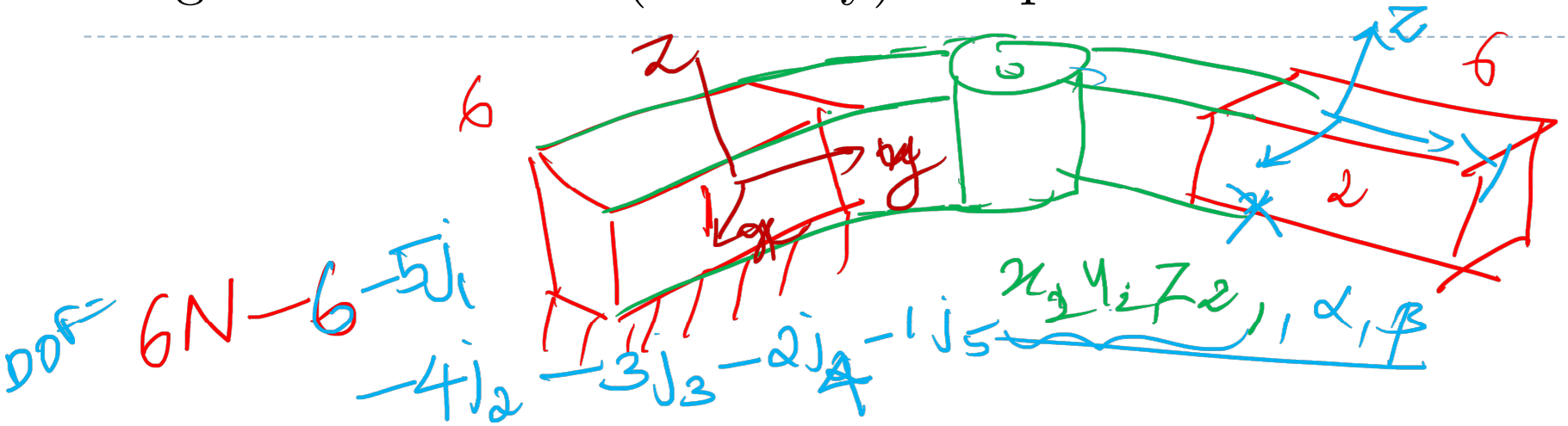

A one-freedom joint removes 5 DOF

The Kutzbach mobility equation for spatial linkages

$$\boxed{M = 6(N-1) - 5J_1 - 4J_2 - 3J_3 - 2J_4 - J_5}$$

Joints

Joint type	dof f	Constraints c between two planar rigid bodies	Constraints c between two spatial rigid bodies
Revolute (R)	1		
Prismatic (P)	1		
Helical (H)	1		
Cylindrical (C)	2		
Universal (U)	2		
Spherical (S)	3		

planar

The number of degrees of freedom f and constraints c provided by common joints.

Joints DoF

Joint Type	**Degrees of Freedom (f)**	**Constraints (c) between Two Planar Rigid Bodies**	**Constraints (c) between Two Spatial Rigid Bodies**
Revolute (R)	1	2	5
Prismatic (P)	1	2	5
Helical (H)	1	N/A	5
Cylindrical (C)	2	N/A	4
Universal (U)	2	N/A	4
Spherical (S)	3	N/A	3

- Cylinder Joint, C DOF = 2

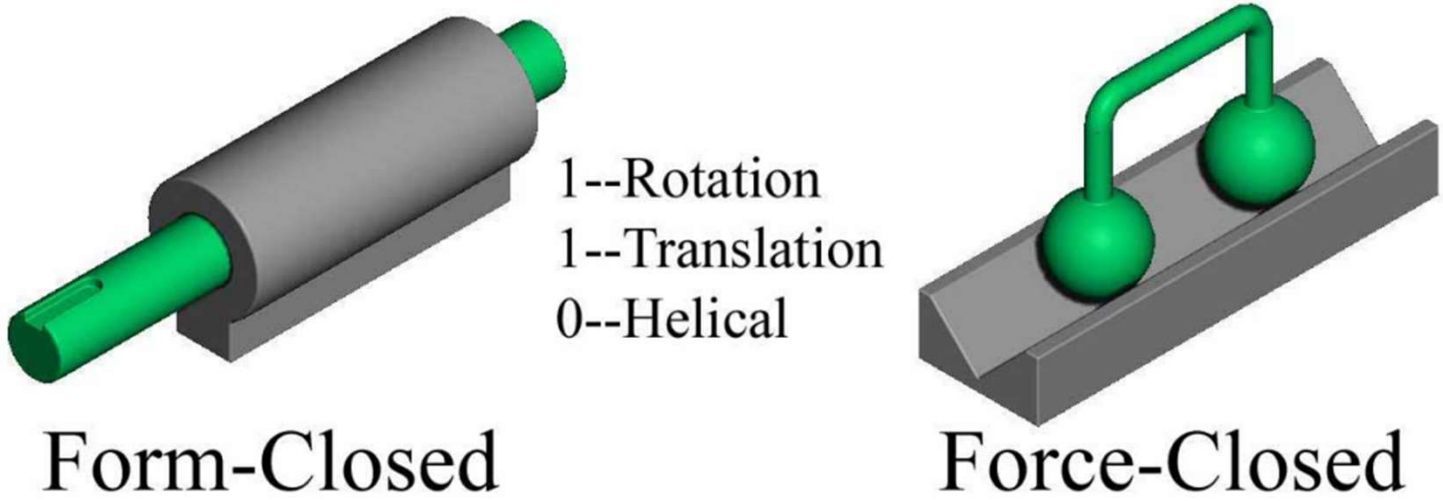

Wharton, Scott, and Yesh Singh. "Development of Solid Models and Multimedia Presentations of Kinematic Pairs." In *2001 Annual Conference*, pp. 6-381. 2001.

Kinematic pairs in which R and T are dependent

$$DOF = k(N-1) - 2j_1 - j_2$$

$k = 3$

$$= k(N-1) - (k - f_i)$$

$k = 6$

$$= 6(N-1) - (6-1)$$

$$= 6(N-1) - 5$$

Gruebler's Condition

the number of constraint equations imposed by j joints

$$DoF = K(N-1) - \sum_{i=1}^{j}(K - f_i)$$

K = No. of parameters required to specify a single link 3 or 6

N = no. of links

j = no. of joints

f_i = is the freedom of the jth joint

$$DoF = K(N - 1 - j) + \sum_{i=1}^{j} f_i$$

How to find DoF?

- The Grübler's formula correctly predicts the number of actuators needed in a regular configuration.

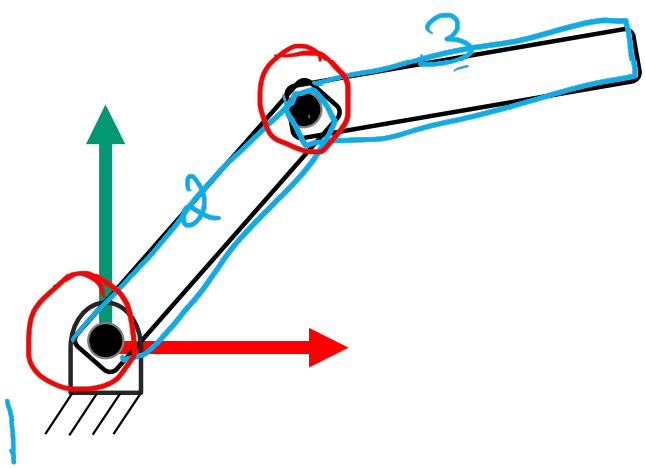

$$K = 3$$

$$DoF = K(N - 1 - j) + \sum f_i$$

$$N = 3$$

$$j = 2$$

$$= 3(3 - 1 - 2) + \underbrace{f_1}_{1} + \underbrace{f_2}_{1}$$

$$\boxed{DoF = 2}$$

How to find DoF?

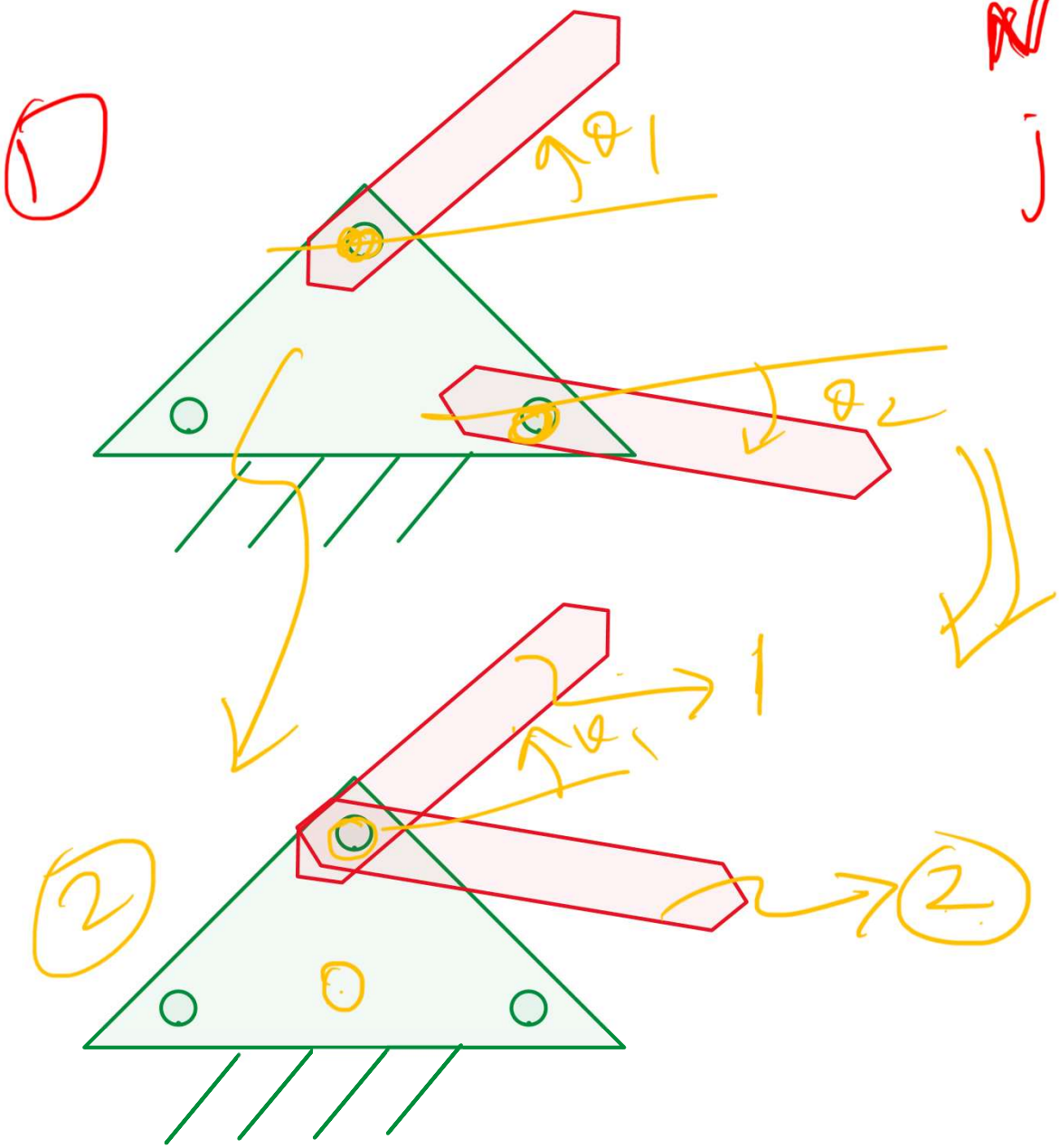

$N = 3$

$j = 2$

$M = 2$

$N = 3$

$j = 2$

$M = 2$

Gruebler's Condition

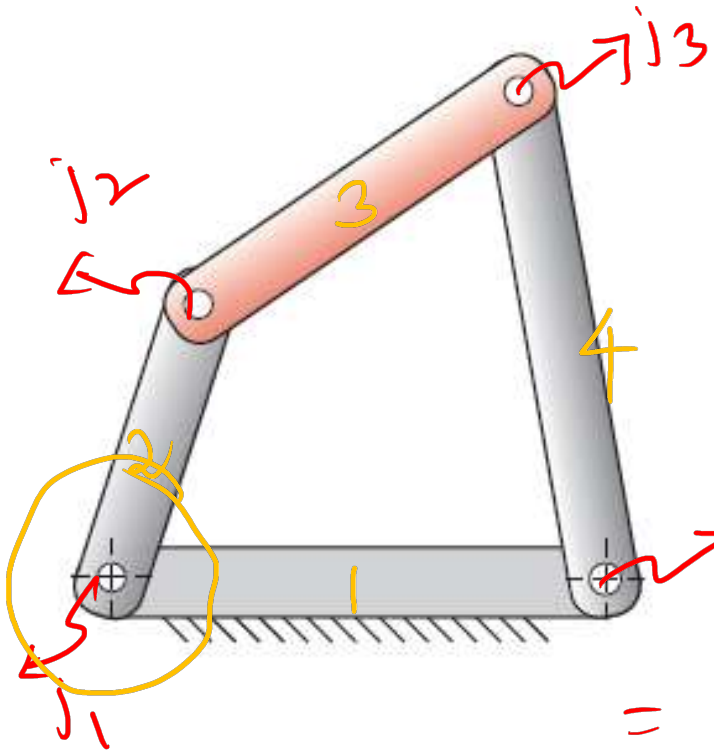

$N = 4$

$j = 4$

$M =$

$= k(N - 1 - j) + \sum f_i$

$k \to 3$, $N \to 4$, $j \to 4$, $+4$

DoF $= 1$

Gruebler's Condition

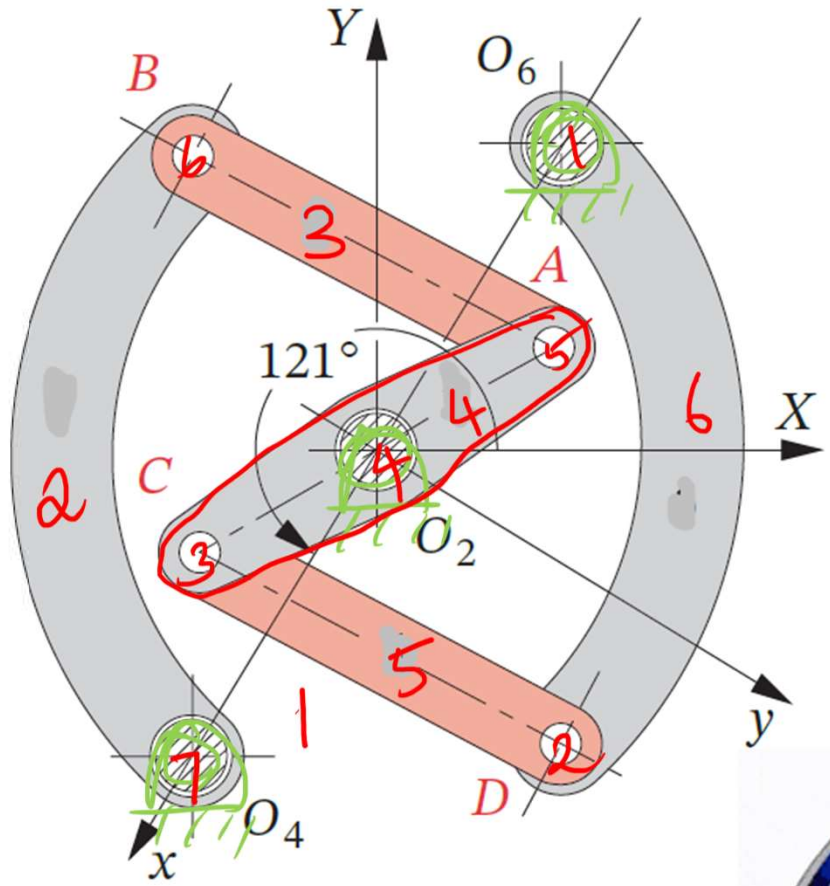

Drum brake

N = 6

j = 7

M = 1

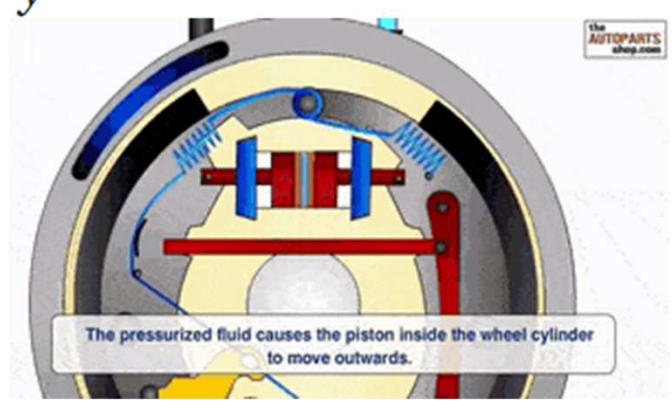

Gruebler's Condition

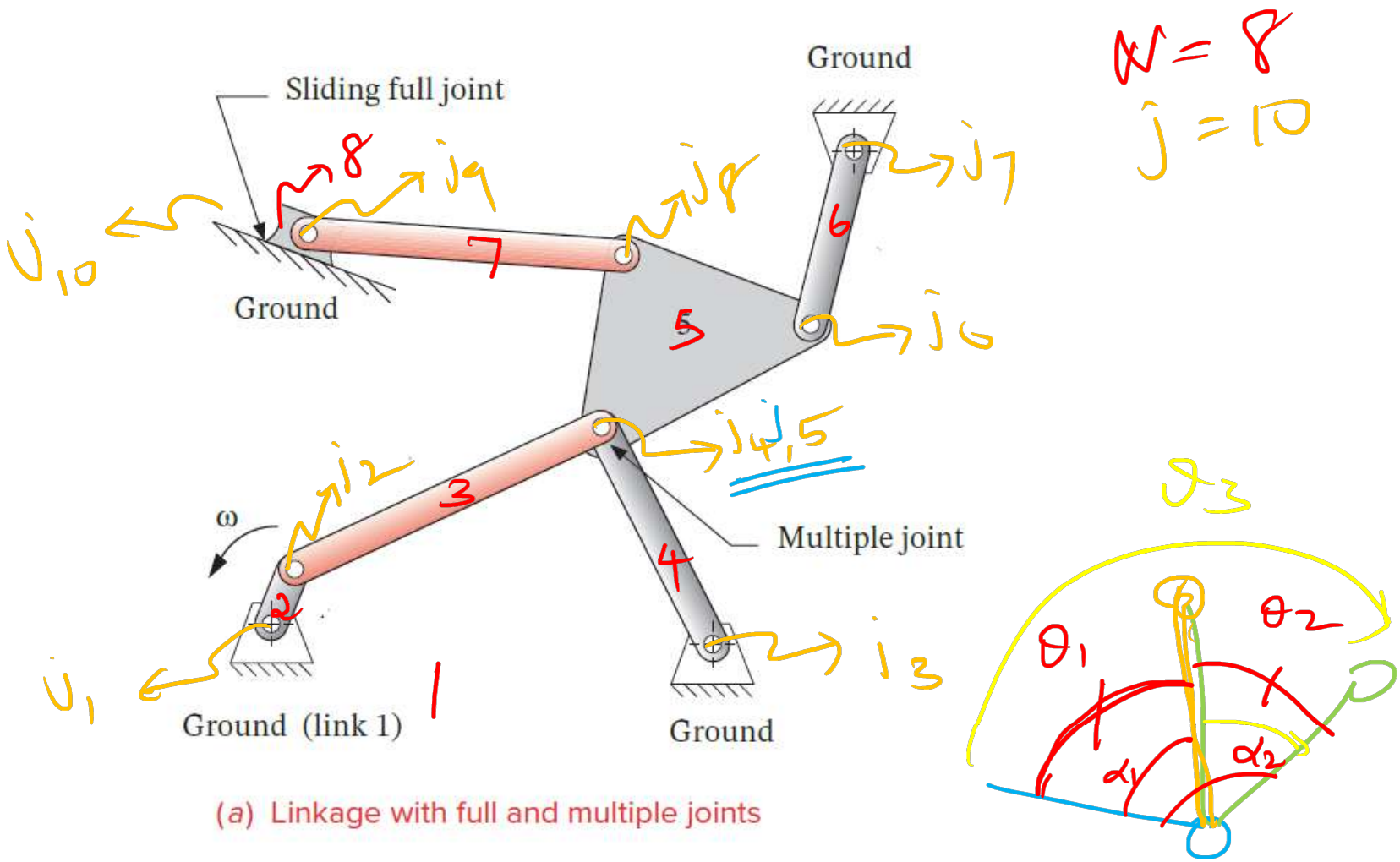

(a) Linkage with full and multiple joints

Example

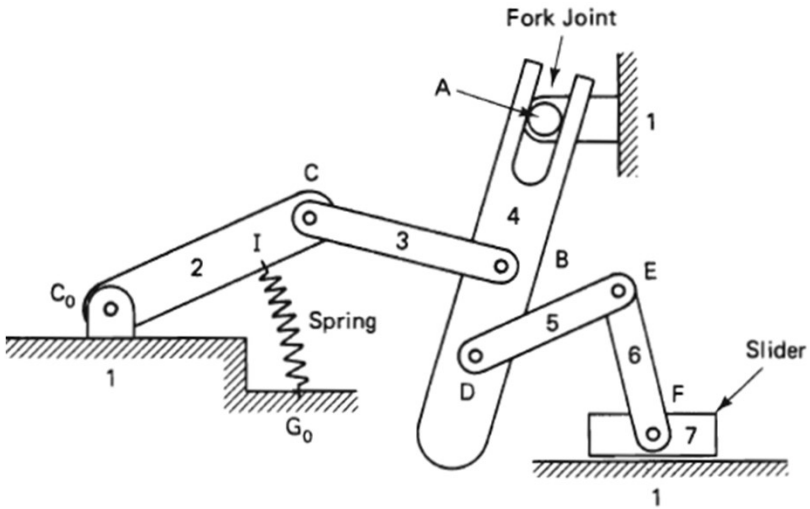
Fork Joint
A
1
C
4
3
I
2
B
E
C_0
Spring
5
6
Slider
1
D
F
7
G_0
1

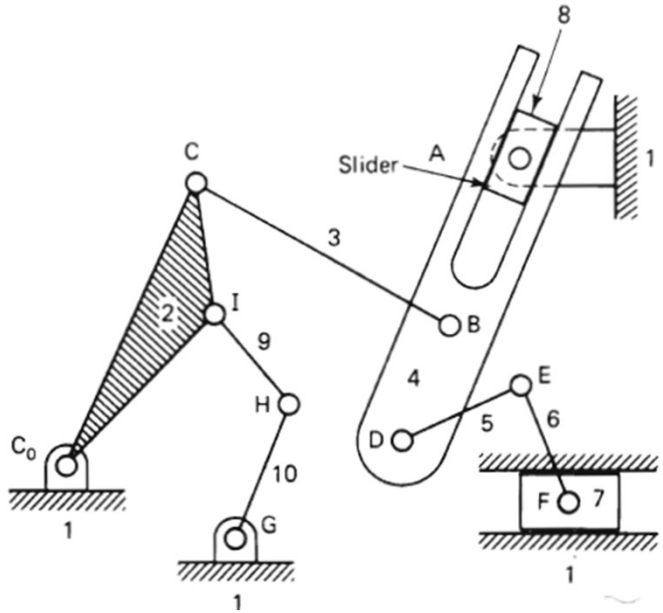
8
C
Slider
A
1
3
2
I
B
9
4
E
H
5
6
D
C_0
10
F
7
G
1
1
1

Gruebler's Condition

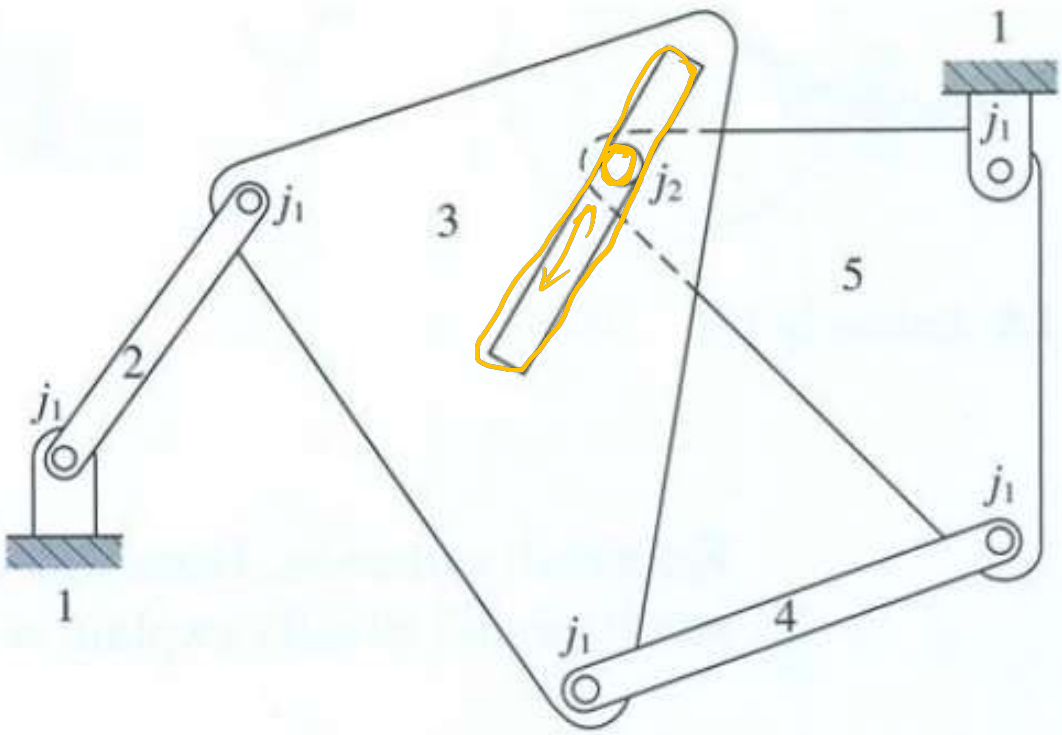

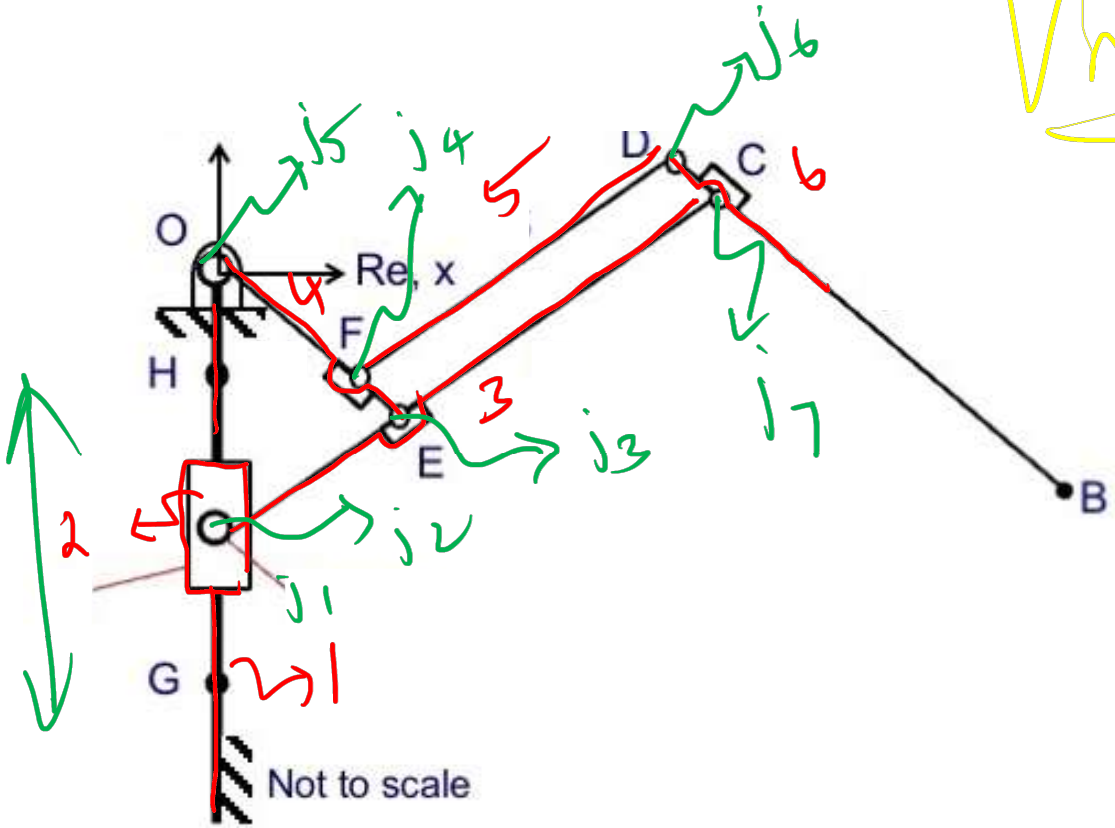

Umbrella

N = 6

j = 7

M = 1

$N = 9$

$j = 11$

$= k(N-1-j) + \sum f_i$

$= 3(9-1-11) + 11$

$= 2$

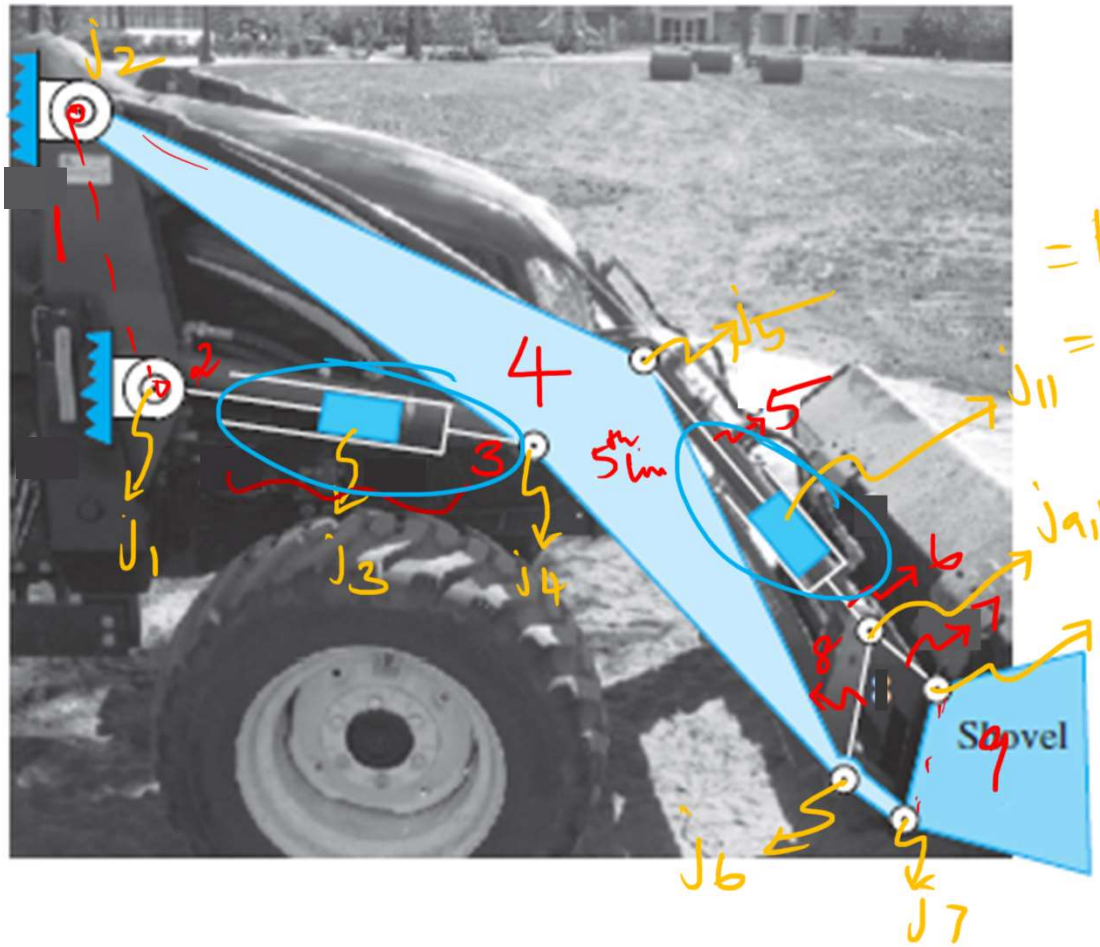

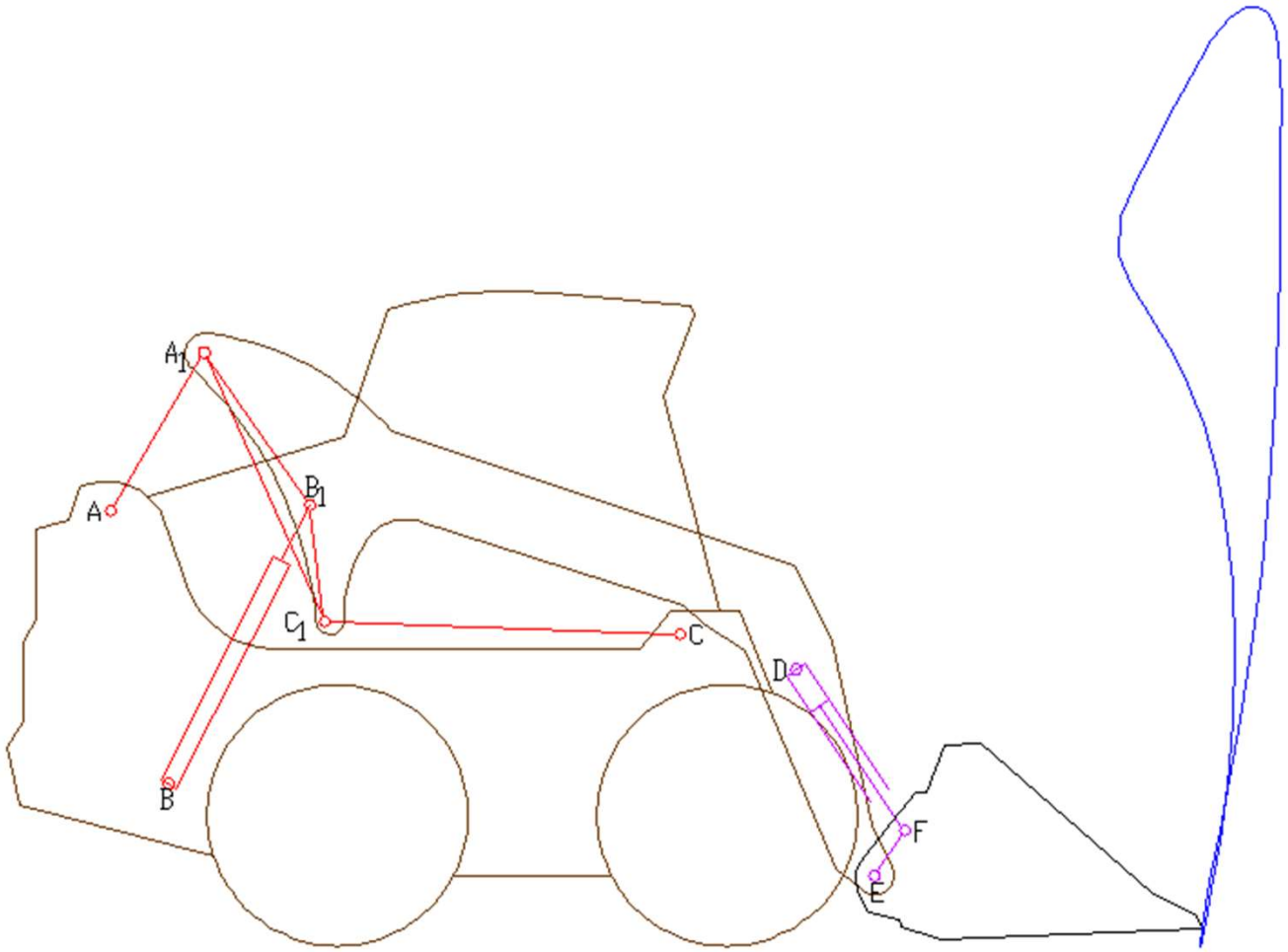
A1
A
B1
C1
C
D
B
F
E

MECHANISMS AND STRUCTURES

- If the DOF is positive, it will be a **mechanism**, and the links will have relative motion

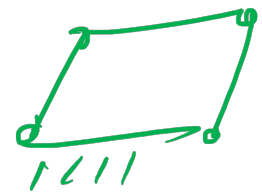

DOF = 1

- If the DOF is exactly zero, then it will be a **structure**, and no motion is possible.

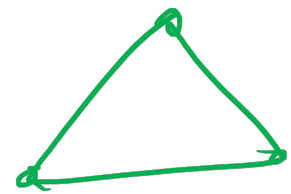

N = 3

j = 3

DOF = 0

- If the DOF is negative, then it is a **preloaded structure**, which means that no motion is possible and some stresses may also be present at the time of assembly.

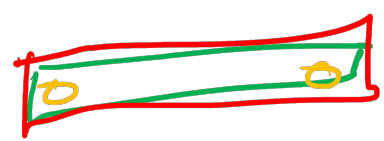

N = 2

j = 2

DOF = −1

How to find DoF?

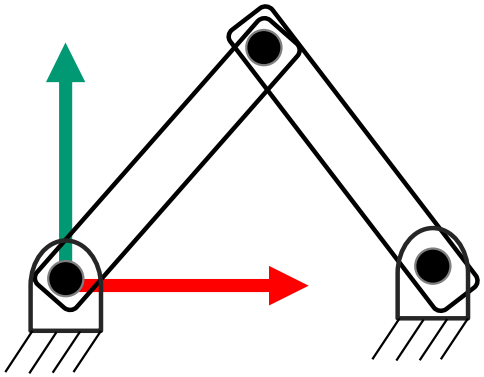

$N = 3$

$j = 3$

DoF = 0

- Three links, Three Joints
  - Statically Determinant Structure

How to find DoF?

- Two links, Two Joints

Two overlapped joints – Statically Indeterminant Structure

Degree of Freedom

- A mechanism must have at least 1 DoF
- A structure has 0 DoF
- An over constrained structure has negative DoF

Failure of DoF

N = 6

j = 6

DoF = 0

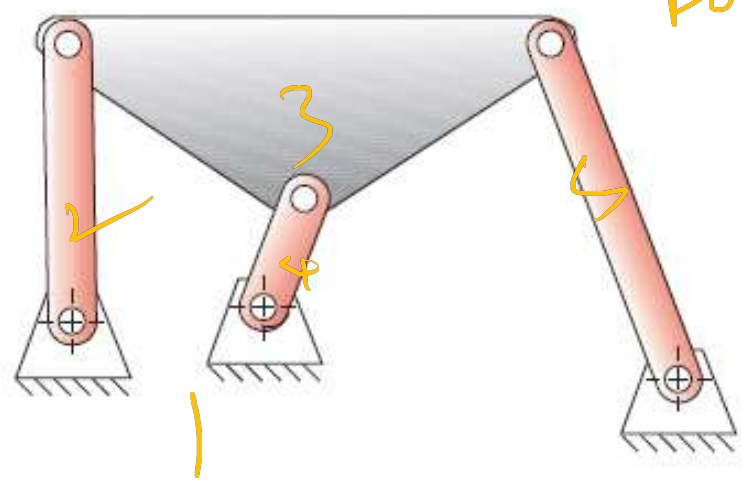

Failure of DoF

- The failure is because the special dimension.
- Small perturbation in link lengths make it structure. (It may get jammed if there are any manufacturing errors.)
- DoF is invariant under small perturbation
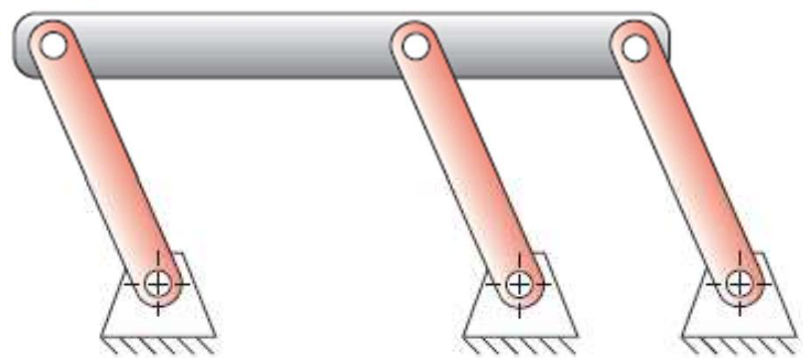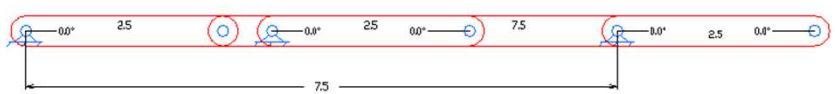
DoF = 0