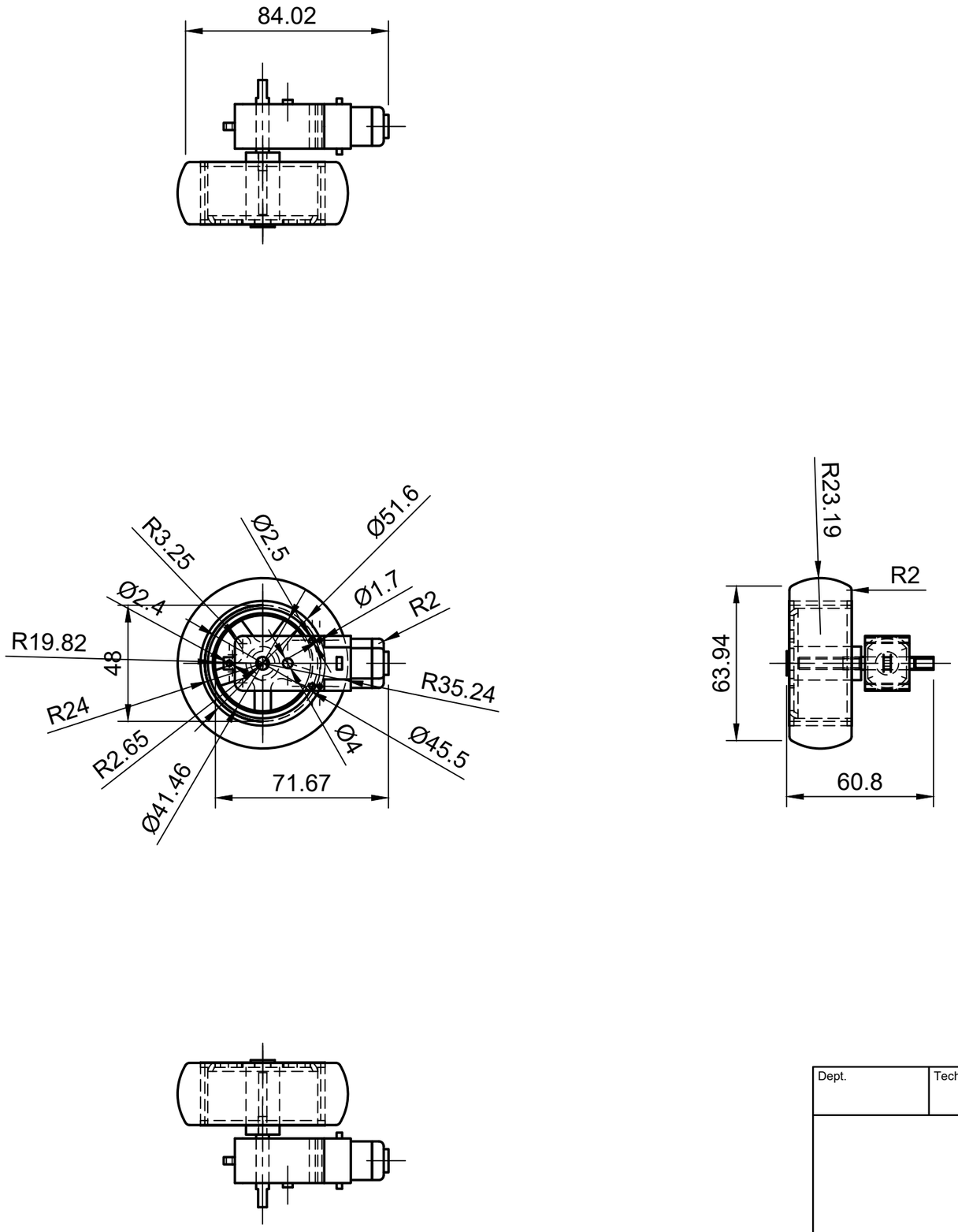

Dept.	Technical reference	Created by Karthik VS 30-09-2025	Approved by
		Document type	Document status
		Title sensbot motor+wheel	DWG No.
			Rev. / Date of issue / Sheet 1/1