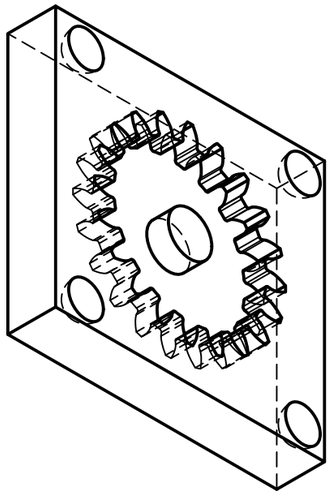

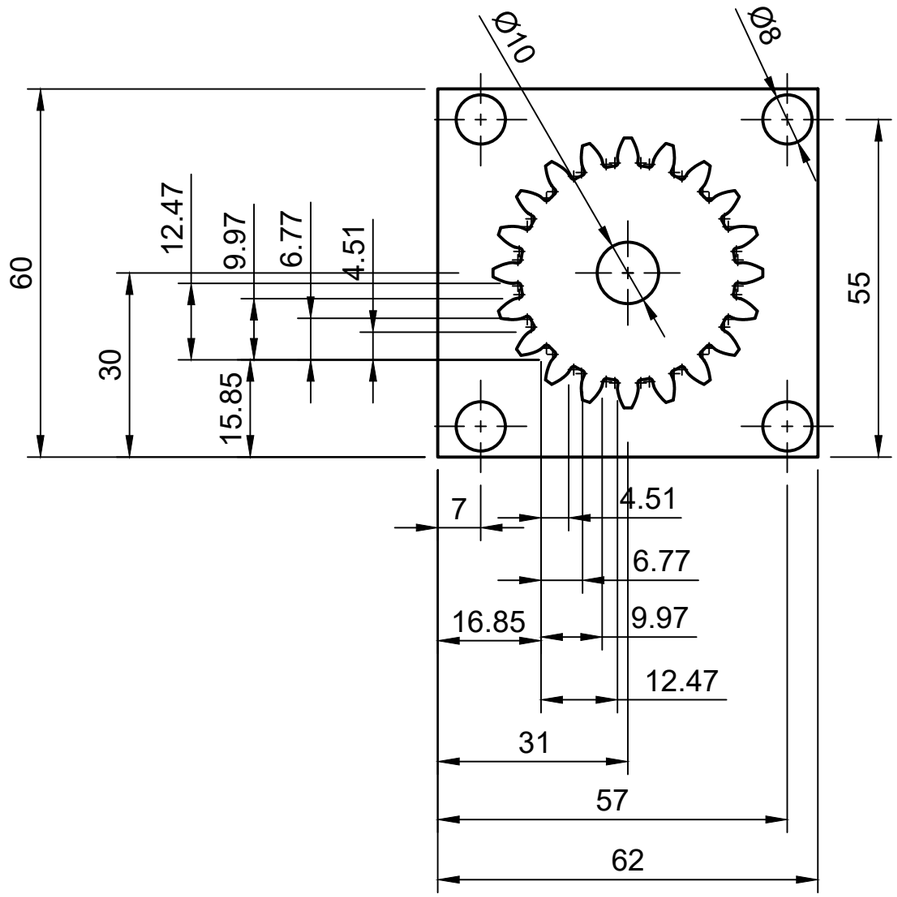

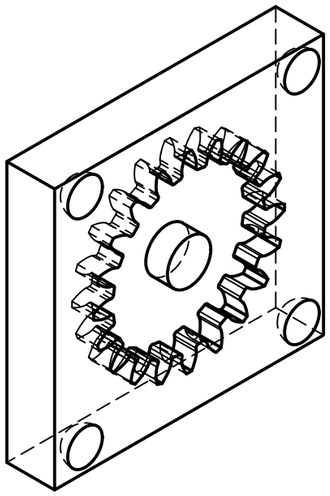

Dept.	Technical reference	Created by Karthik VS 01-10-2025	Approved by
		Document type	Document status
		Title Mold Drag Spur Gear	DWG No.
			Rev. / Date of issue / Sheet 1/1