Smart Energy Monitoring and Optimization

Using machine learning model

"An efficient machine learning model designed to monitor energy consumption, optimize usage, and help users reduce electricity bills effectively"

Created by:

Saloni Maind --2203031050729

Sarathi pradhan –2203031050505

Parmar kashyapsinh –2203031050435

Bhumesh Suthar --2203031050855

Overview

- Project Brief
- Flow Diagram
- Hardware diagram
- Hardware Overview
- Required platform
- Conclusion

" SMART ENERGY MONITORING & OPTIMIZATION SYSTEM USING AI/ML MODEL."

Start

Hardware Setup

- Arduino board connected to relays controlling devices (LED, DC Motor, Bulb)
- Sensors (e.g., ACS712) attached for current measurements.
- Power supply integration for devices

Data Collection

- Arduino sketch periodically reads current, voltage, and ON/OFF status.
- Data transmission to a laptop via Serial communication.
- Python script logs data into a CSV file with columns:
  Timestamp, Device ID, Power Consumption,
  ON/OFF Status.

AI ANALYSIS

- Preprocessing logged data using Python.Clustering for usage patterns.
- Regression for consumption prediction.
- Optimization suggestions (e.g., turning off idle devices)."

Electricity Bill Generation

- Calculate power consumption per device.
- Multiply by cost/unit for bill generation.
- Save/display results in a user-friendly format (CSV).

System Integration

- Real-time monitoring via Python script interfacing with Arduino.
- User Interface (web app or GUI) displaying: Live data
- Usage suggestions Electricity bills.

END

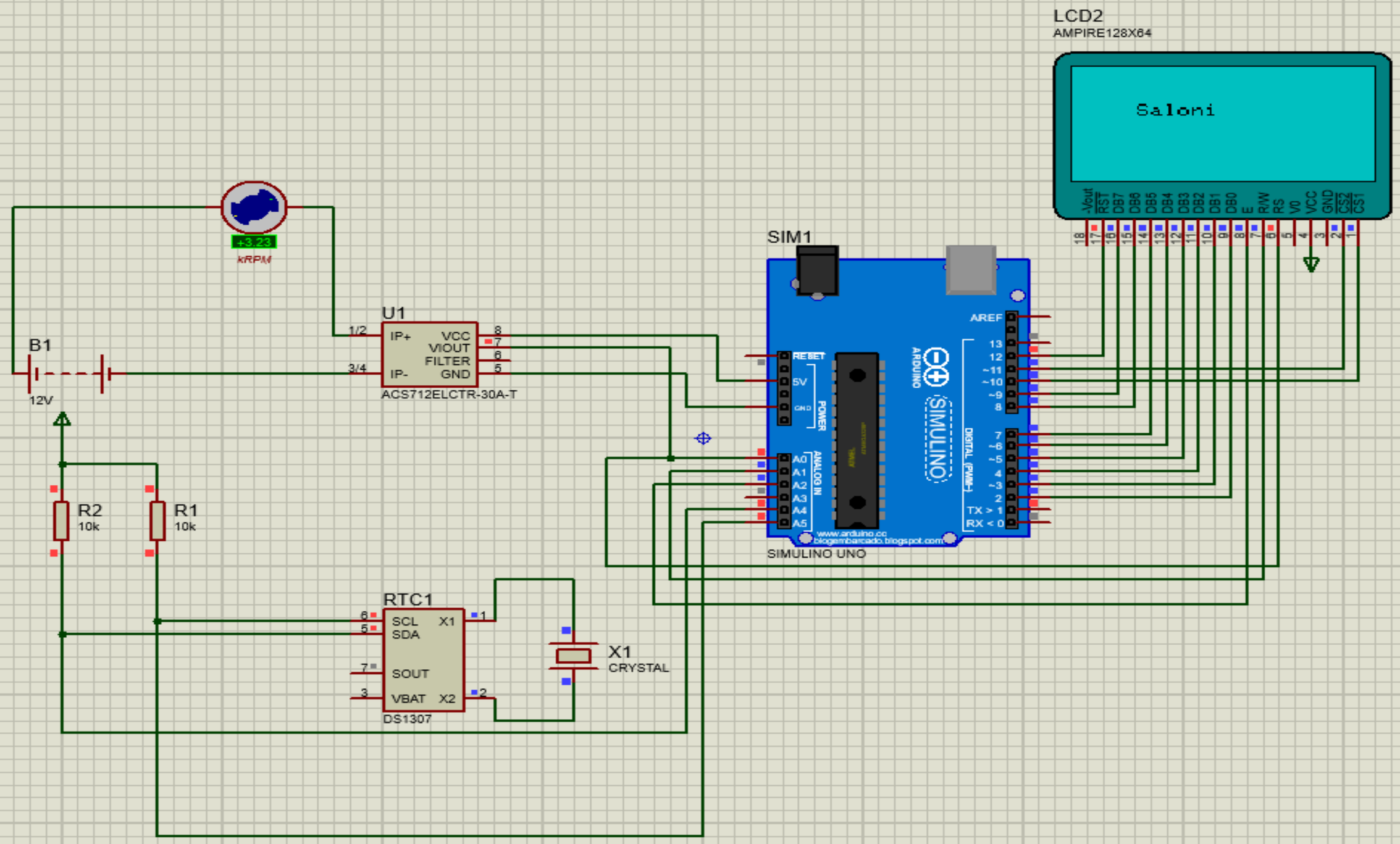
LCD2
AMPIRE128X64
Saloni
-Vout
RST
DB7
DB6
DB5
DB4
DB3
DB2
DB1
DB0
E
R/W
RS
V0
VCC
GND
CS2
CS1
+3.23
kRPM
U1
IP+
IP-
VCC
VIOUT
FILTER
GND
ACS712ELCTR-30A-T
B1
12V
R2
10k
R1
10k
SIM1
AREF
RESET
5V
GND
POWER
ANALOG IN
A0
A1
A2
A3
A4
A5
DIGITAL (PWM~)
TX > 1
RX < 0
SIMULINO
ARDUINO
www.arduino.cc
blogembarcado.blogspot.com
SIMULINO UNO
RTC1
SCL
SDA
SOUT
VBAT
X1
X2
DS1307
X1
CRYSTAL

ARDUINO™

python™

Pandas

NumPy

scikit learn

matplotlib

React

Visual Studio Code

CO

Hardware Setup

Smart Meters

Install smart meters to track real-time energy consumption for each appliance.

Sensors

Integrate sensors to capture data on factors like temperature and humidity.

Data Collection

1 Continuous Monitoring

Collect energy data at regular intervals, capturing detailed usage patterns.

2 Data Storage

Store data securely and efficiently in a centralized database for analysis.

CSV Logging

Timestamp	Appliance	Energy Consumption (kWh)
2023-11-10 10:00:00	Refrigerator	0.25
2023-11-10 10:15:00	Washing Machine	1.50

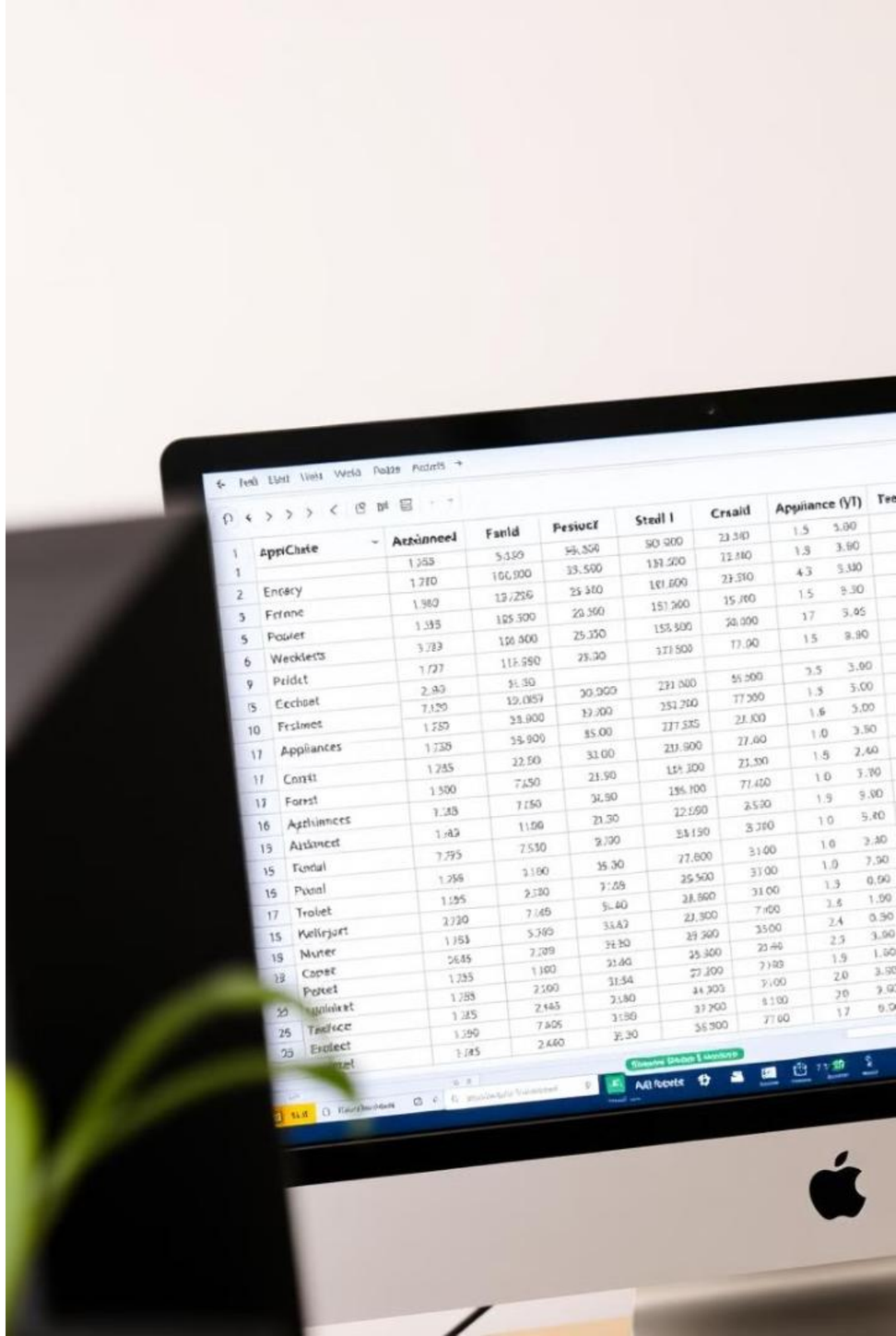

AI Analysis & Suggestions

Energy Waste Detection

Analyze data to identify areas where energy is being wasted, such as appliances left on unnecessarily.

Usage Prediction

Forecast future energy consumption based on historical trends and user behavior.

Optimization Suggestions

Provide personalized recommendations to optimize energy usage and minimize costs.

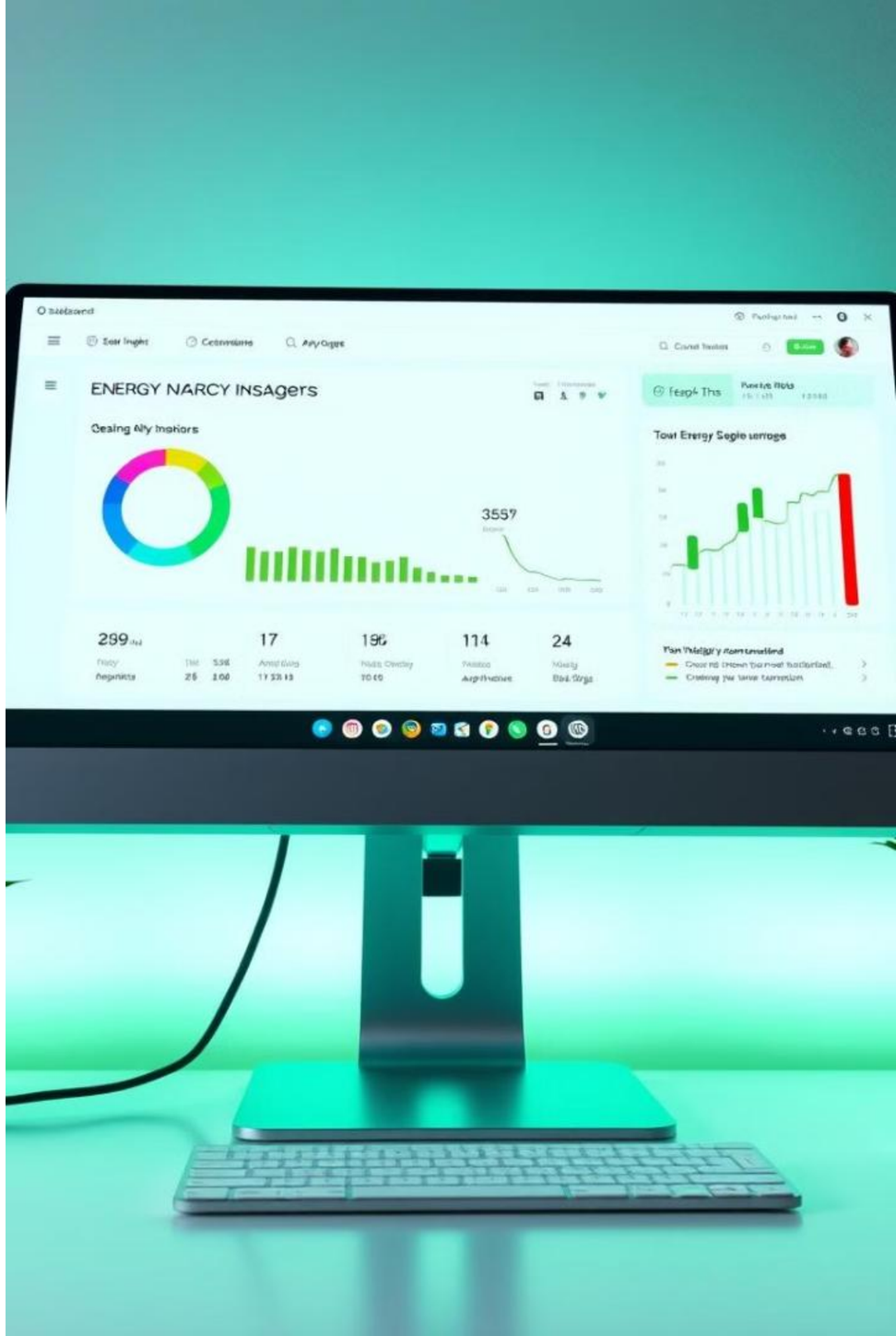

Electricity Bill Generation

$200

Baseline Bill

The average electricity bill before optimization measures.

$150

Optimized Bill

Savings achieved through smart energy monitoring and optimization.

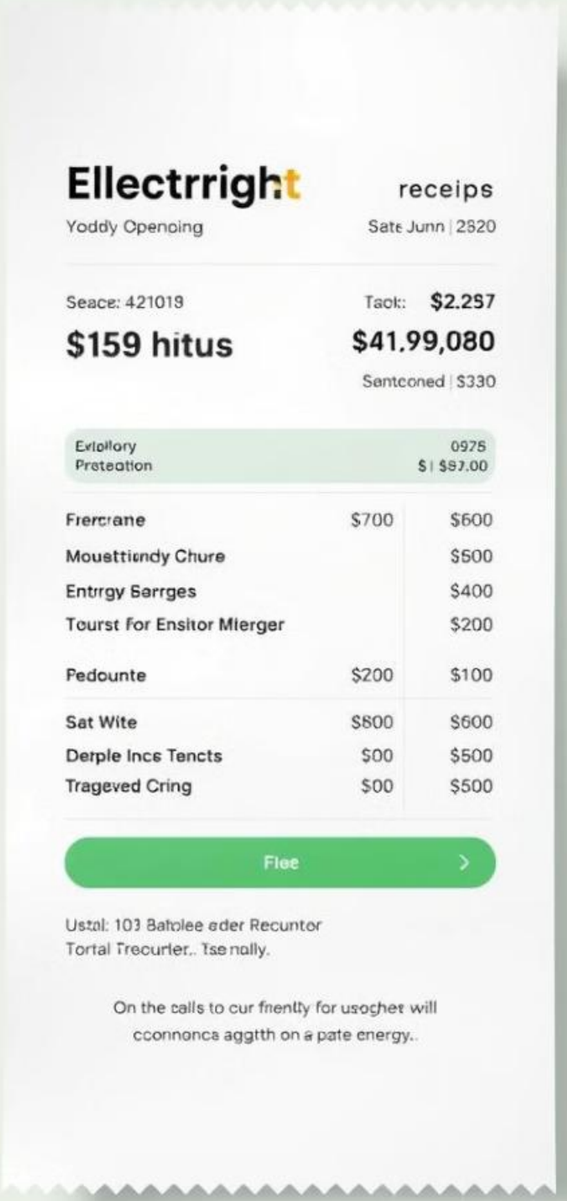

System Integration

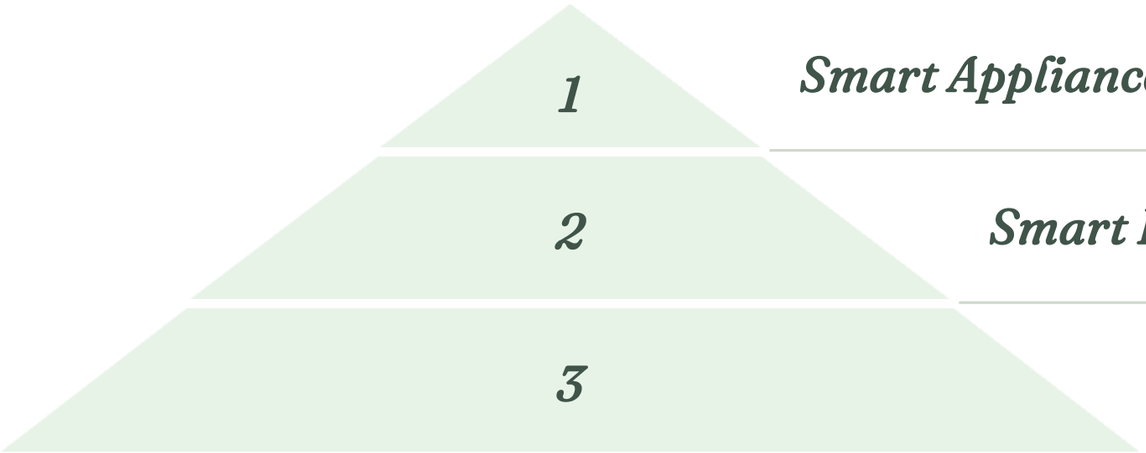

Smart Appliances

Smart Home Hub

Energy Monitoring System

Conclusion

This smart energy monitoring system is a game-changer for optimizing energy consumption and empowering users to make informed decisions, leading to significant cost savings and environmental benefits.