CS152B Lab 0: Digital Desgin Project Laboratory

Katharine Archer (UID: 305831393)
Yashica Prasad (UID: 006090382)

April 3, 2026

1 Introduction

The objective of this lab is to design, implement, and test a simple four-bit up counter on the Basys3 FPGA board. The four-bit counter's value increments from 0 to 15 continuously at 1 Hz by overflowing to 0 once the value reaches 15. An asynchronous reset trigger sets the counter back to 0. Timing is achieved via a clock divider. The functionality for reset logic, nominal counting, and edge cases is verified in a simulation with a testbench. A constraint file maps the top-level Verilog module I/O to the pins on the board, such that four of the built-in LEDs illuminate the current value of the counter in binary, and counter reset is possible through selection of the upper button.

2 Schematic and Code

Code lives on github: https://github.com/Katharine-a/digital_design/tree/main/four_bit_up_counter

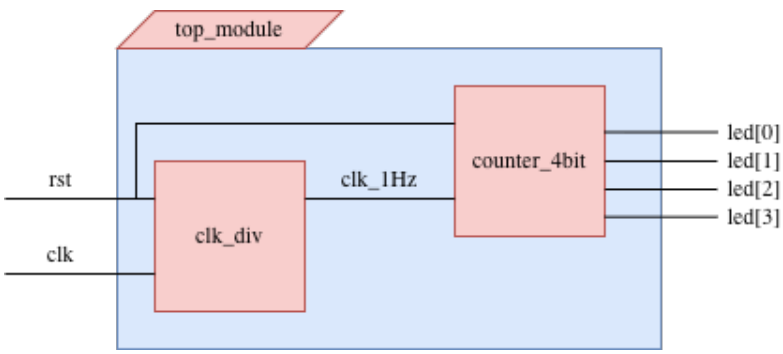

Figure 1: Block Diagram for a Four-Bit Up Counter

3 Description of Components

This digital system is of hierarchical design, with a top-level module that instantiates a clock divider module and a four-bit counter module.

1. `counter_4bit`: Increments a four-bit wide wire on each positive edge of the clock. When reset is high, the counter is zeroed. Reset is asynchronous to the clock.
   (a) Input(s):
      i. `input wire clk`
      ii. `input wire rst`
   (b) Output(s):
      i. `output wire [3:0] count`
2. `clk_div`: Performs clock division on the master clock of 100 MHz to output a slower clock of 1Hz.
   (a) Input(s):

i. `input wire clk`
ii. `input wire rst`

(b) Output(s):

i. `output reg output_clk`

3. `top_module`: The highest-level module. This module wires a `clk_div` and a `counter_4bit` instance together.

- Input(s):
  (a) `input wire clk`
  (b) `input wire rst`
- Output(s):
  (a) `output wire [3:0] led`

4 Challenges

The primary challenge in the project involved timing precision in the clock divider and the transition from hardware logic to simulation based verification.

- **Clock Divider Logic:** We initially encountered an off by one error in the clk_div module. To achieve a precise 1Hz output with a 50% duty cycle from the 100MHz master clock, the signal must toggle every 5e7 cycles. We initially struggled with the terminal count value (deciding between N or N-1). After observing the timing simulation, we corrected the logic to reset the counter when it reaches 5e7-1, ensuring the output clock period is exactly 1.0 second.

- **Testbench Signal Driving:** Another significant challenge was correctly implementing the testbench simulation for the counter. We initially attempted to simulate the clk signal with an always block that toggled it with a 5ns delay. However, we faced issues correctly generating the waveform, and had to go back to hard-coding the signal by repeatedly setting the clk signal to 0 or 1 with 5ns delays. Eventually, we figured out that we needed to initialize the rst signal as well and were able to correct and utilize our original approach of automatically toggling clk using an always block.

5 Questions

5.1 Please research "signal debouncing." Explain why we did not need to worry about debouncing the button press for our reset signal.

When a physical button is pressed on the basys3 board, the signal carries noise. Our design does not require that the reset signal be received exactly once. Even without debouncing and multiple reset signals being received by the FPGA due to noise from the button, the counter increments every second, and the noise from a few milliseconds does not impact the resetting of the counter.

5.2 What is the relationship between the number of flip-flops (bits) in the counter and the maximum value the counter can store?

For our 4-bit counter (n = 4), the maximum value that can be stored is $2^4 - 1 = 15$. When the counter reaches 1111 in binary (15 in decimal) and receives another clock pulse, it rolls over to 0000. The number of flip-flops in a counter corresponds to the number of binary bits (n) available to store a value. Because each flip-flop can represent two states (0 or 1), a counter with n bits can represent 2^n distinct values. Since digital counters typically start counting at 0, the maximum value (V_{max}) is one less than the total number of states: $V_{max} = 2^n - 1$

5.3 What are you looking forward to in this course?

We are looking forward to increasing our proficiency with the Verilog HDL and making a meaningful technical project that synthesizes content we have learned over the course of our undergraduate degrees.

6 Testing

The testbench exercises the behavior of the counter when it increments nominally, values overflow, and when a reset signal is received while counting intermediate values. The testbench instantiates the four-bit counter as the unit under test, generates a free-running clock by toggling `tb_clk` every 5 time units, and drives the asynchronous reset signal to verify that the counter resets correctly during simulation. It first applies a reset near the beginning of the run, later asserts reset again while the counter is operating, and then allows the simulation to continue long enough to observe normal counting behavior before calling `$finish`.

6.1 Testbench: `4_bit_counter_tb`

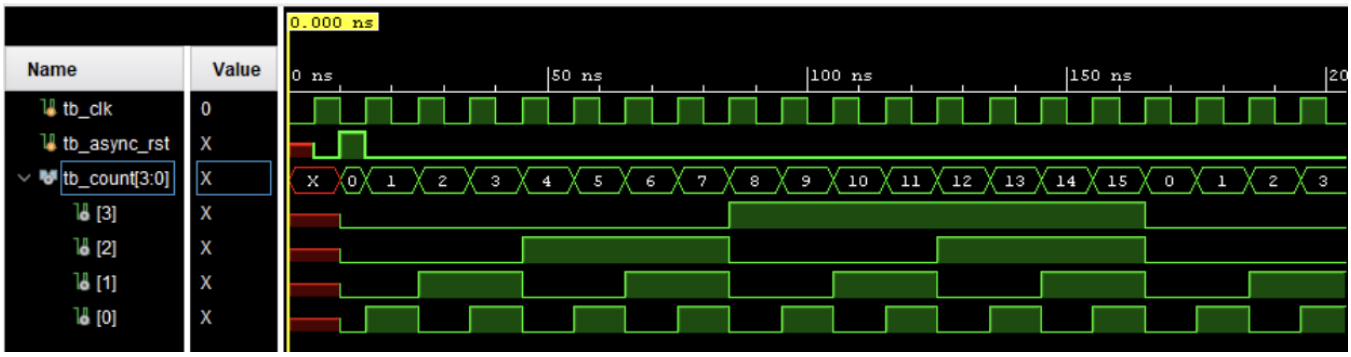

Figure 2: Simulation waveform verifying nominal and overflow behavior

Observe that after the reset is initialized and set to low, the counter correctly increments from 0 to 15 with each positive edge of the clock. After the counter reaches 15, it correctly overflows to 0 at 165 ns, and continues.

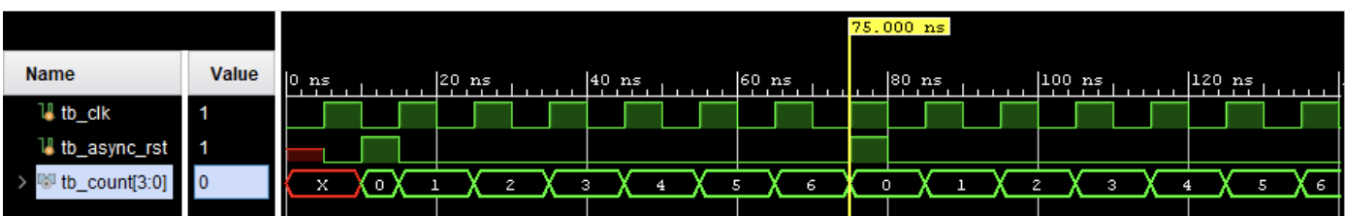

Figure 3: Simulation waveform verifying reset logic

Observe that the counter increments nominally so long as the reset signal is low. When the reset signal goes high at 75 ns, the counter correctly resets to a value of 0 and then resumes incrementing.