Project 4 Proposal

Kathryn Mew

ST: CMSC 395 Android Programming

April 3, 2024

1. **Project Title**: Komos - Event Planner App

2. **Team Members and Individual Responsibilities**:

I will be working individually on this project; thus, I am responsible for every component.

3. **Overall Goal of this Application** (Explain in detail the purpose of your app):

My motivation for creating this Event Planner app is due to past experiences with scheduling events with groups of friends. My goal for this app is to provide a user-friendly event scheduler where users can connect and plan events while minimizing back-and-forth conversation about date and times. One of the key features of this app is that it allows users to see the time periods for which their friends are occupied for any given day without sharing details of these personal events! This app relies on Calendar planning, communication, and connections!

4. **Functionality**:

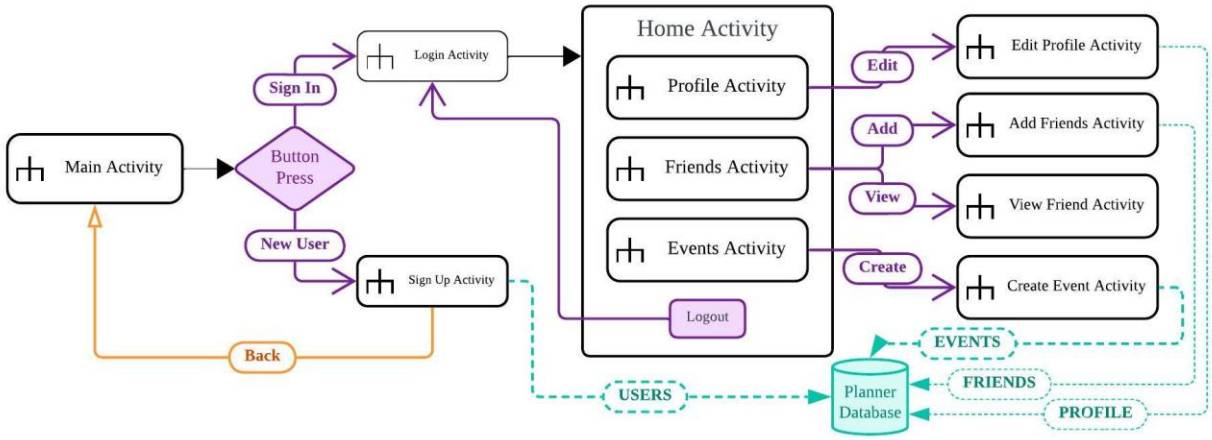

Figure 1: High-Level View of App Diagram

I have constructed rough drafts of a user-interaction with user interface flow diagram and an entity relationship diagram that shows the current tables I plan to have in the **Planner Database**. As such, the most important parts of this app are the SQLite Database, CalendarView, and TimePicker.

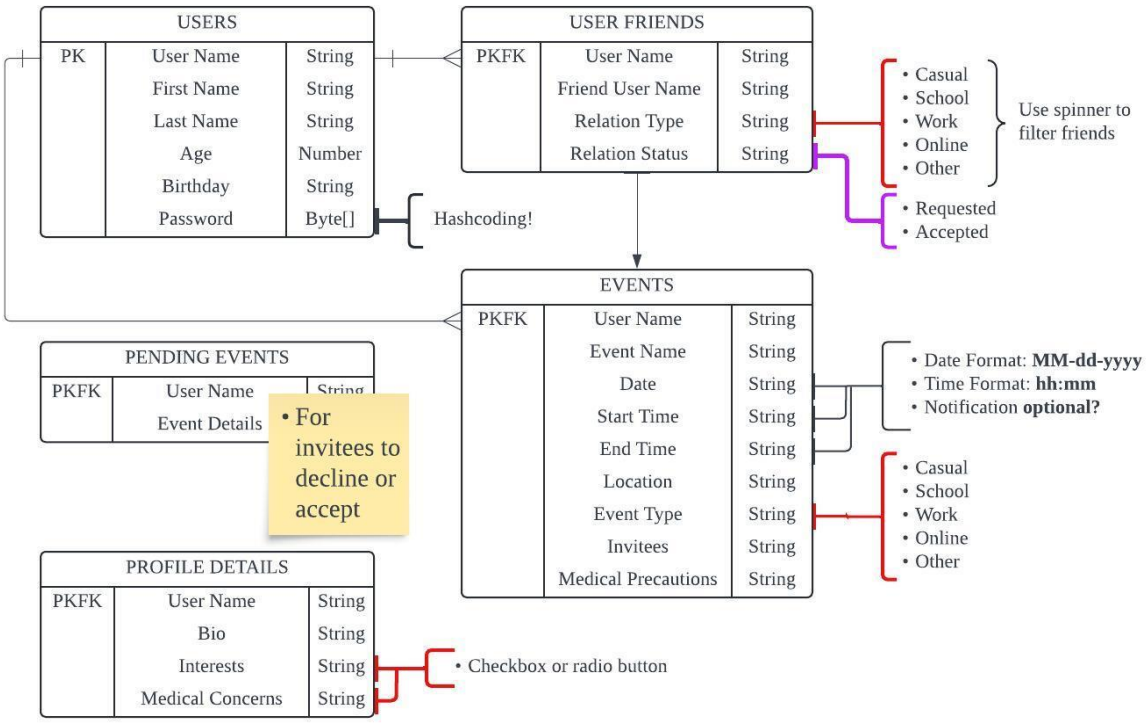

Figure 2: Planner Database Entities

My current layout for each ACTIVITY is the following:

- Main Activity
  - Sign Up, and Sign In/Login navigation

- Sign Up – Data stored in SQLite Database table `Users` (see Figure 2)
  - First & Last name of user – Displayed on user profile by default
  - Age & Birthday – Using **spinners** for month, day, and year. Age is calculated for user when birthday is entered.
  - Username – must have length of at least 3, alphanumeric optional
  - Password – must have length of at least 8, contain at least one number; will be stored in database as hash using encoder provided in Project 2.
  - Displays a Toast 'welcome' message w/ users provided first name if all input is valid and successfully added to database.
  - Resets activity upon submit if successful

- Login
  a. Username & Password

b. Use shared preferences document to store the username of the current user while they are logged in. Will clear when user logs out.
c. Displays appropriate Toast message

- Home
  - Navigation page to following pages: `Profile`, `Friends`, and `Events`
  - `Logout` button
  - Back press will be disabled

- Profile (see **PROFILE DETAILS** in Figure 2)
  - Picture
  - Name – if I have time, I will make this user-changeable in `Edit Profile` Activity
  - Bio / About Me – Optional, Edited in `Edit Profile` Activity
  - Interests – types of events or special interests that users enjoy, such as gaming, fantasy, etc. Implemented with either checkbox or radio button
  - Medical Concerns – anything that planners should take into consideration when inviting a user. This is optional. Implement with a Fragment; if yes, checkbox or radio button.
  - **NOTE**: `Edit Profile` will require that the entry for this user in PROFILE DETAILS is updated, not adding a new one.
  - Edit Profile Activity - Intent

- Friends (see **USER FRIENDS** in Figure 2)
  - Display all friends the user has and their types of relations to these friends
  - Accept or Reject – Friendships will not be added until requested user accepts
  - Filter option – if user wants to isolate a specific type of relation to view friends
  - Search and Add – User can search for another user and request friendship
  - Remove – User can remove a friend from their list
  - View Friend Profile (VFP) Activity – ***If time allows***!

- Events (see **EVENTS** in Figure 2 for more info)
    - **<u>User-Interactions</u>**: Filter, Create event, Delete event, and Edit Event

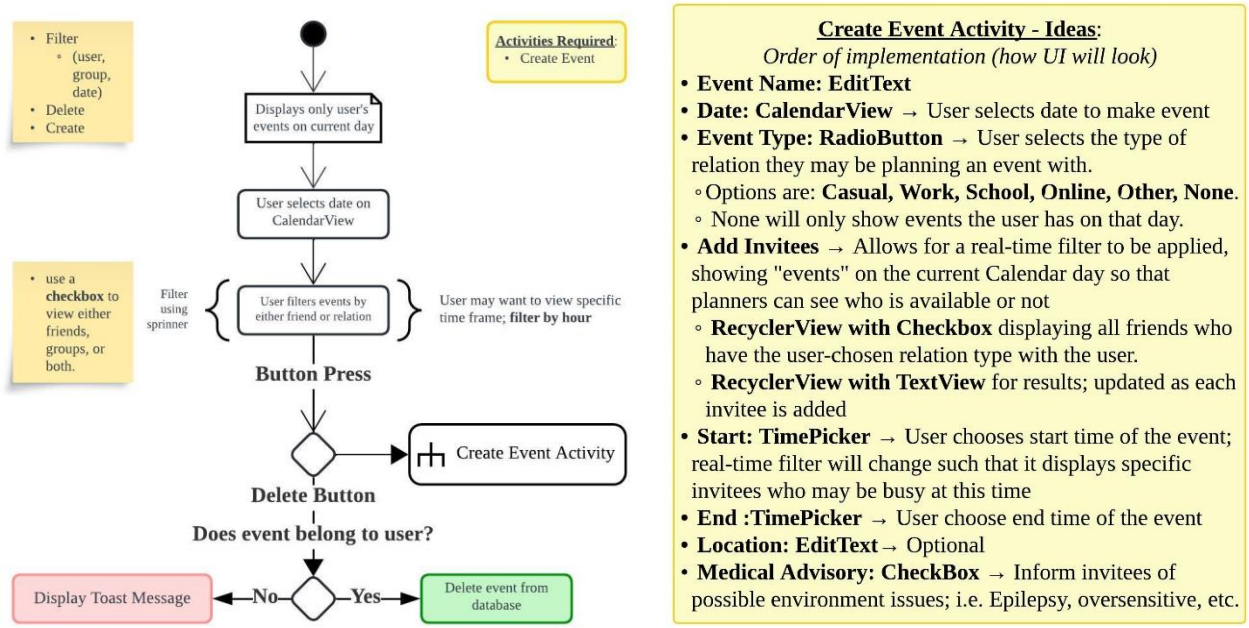

This app requires that SharedPreferences be accessed throughout the duration of runtime as database queries depend on the username of the current user signed in.

I would like to implement Alarm Manager with Event creations, but I am **unsure of how to store pending alarms**. Perhaps a table in the database for Alarms to set of at what times for what user? I also **need some advice for incorporating JSONObjects**. I am thinking of using one JSONObject to hold user data, including their information and friends list.

5. **Components Included:** (list all the widgets you plan to use)
    - TextView, EditText
    - Button, (ImageButton??? – for icons)
    - Checkbox, Radio Button
    - CalendarView
    - TimePicker
    - Spinner
    - RecyclerView, Fragment
    - ScrollView