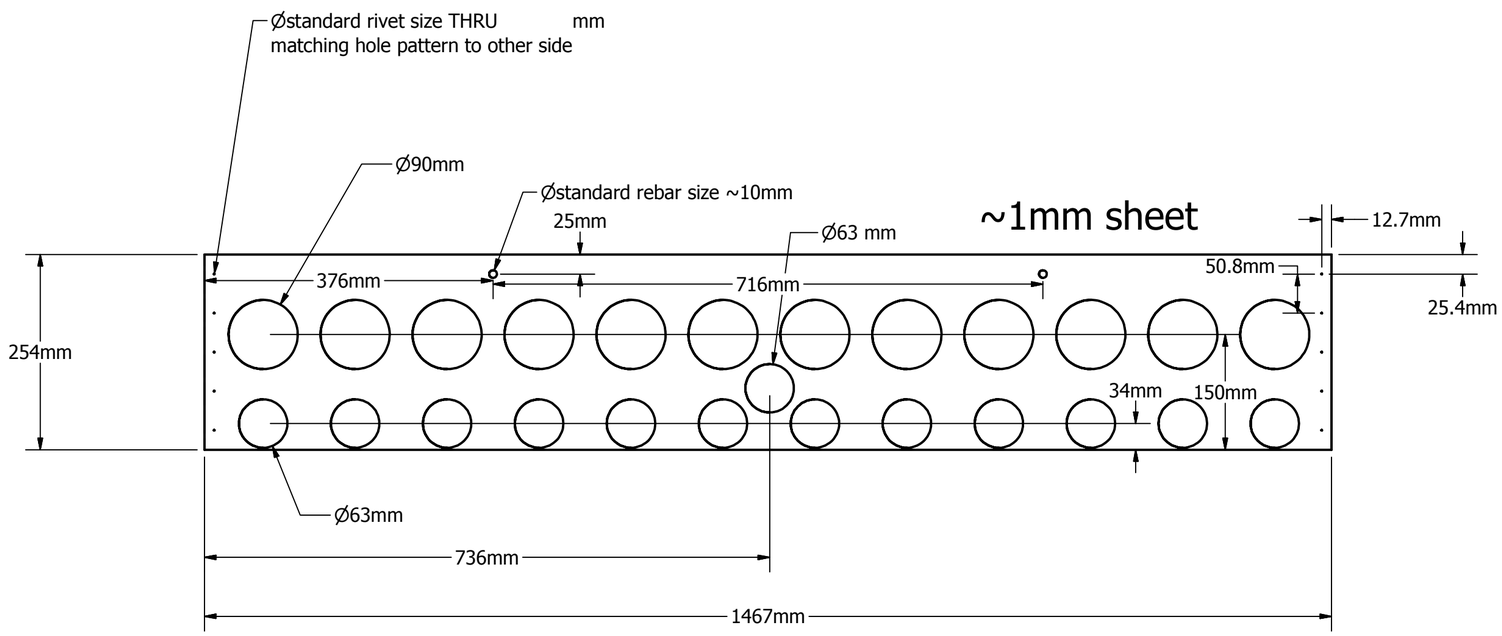

DRAWN Dave	12/2/2014	
CHECKED		TITLE Inner Hub Ring
QA		
MFG		
APPROVED		SIZE C / DWG NO ringInner / REV
		SCALE / SHEET 1 OF 1