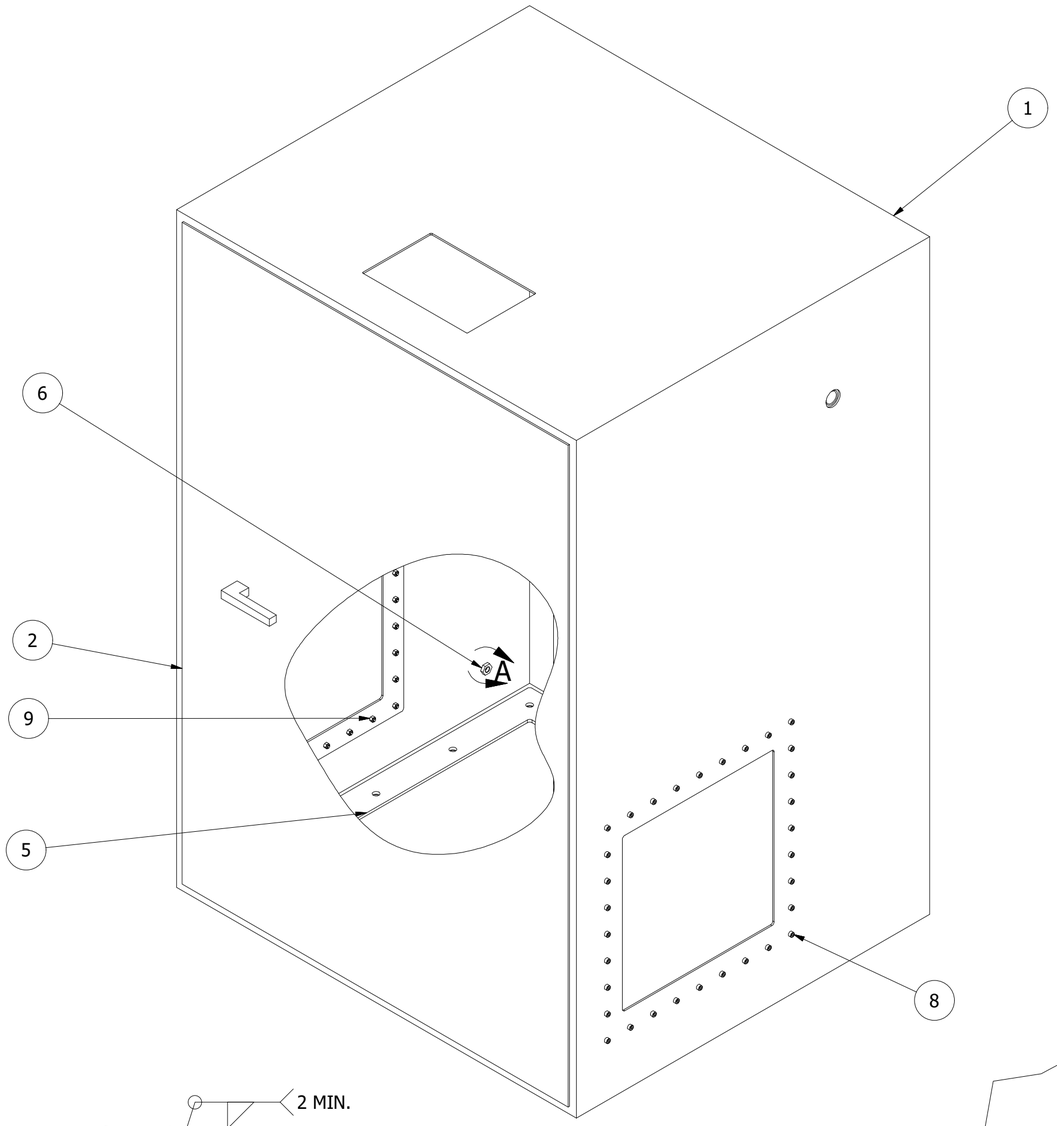

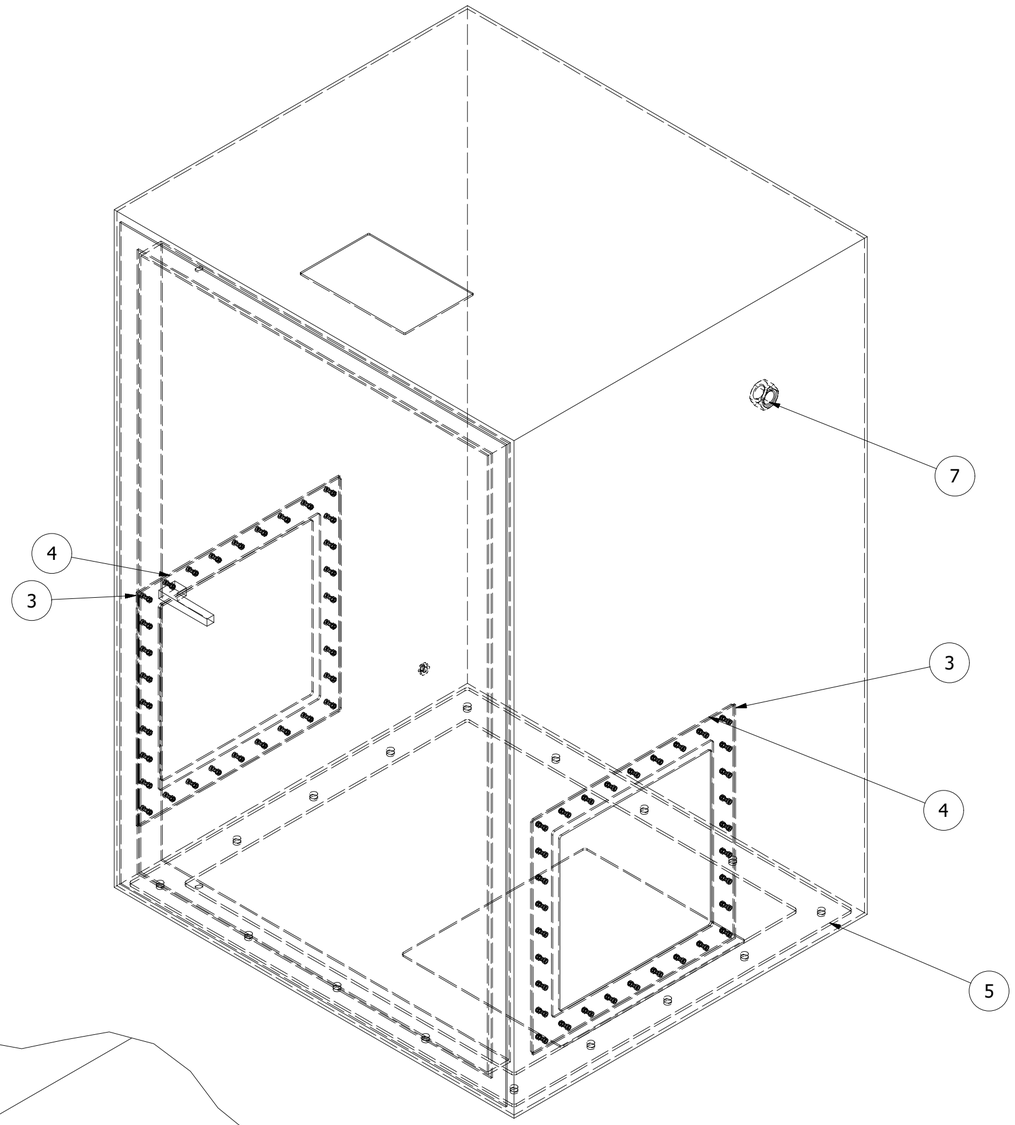

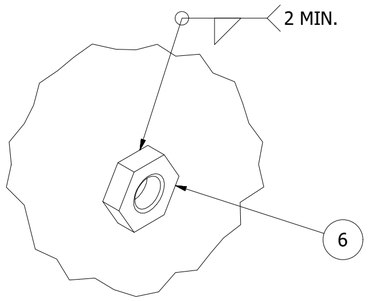

DETAIL: ITEM 6
SCALE 1 : 1

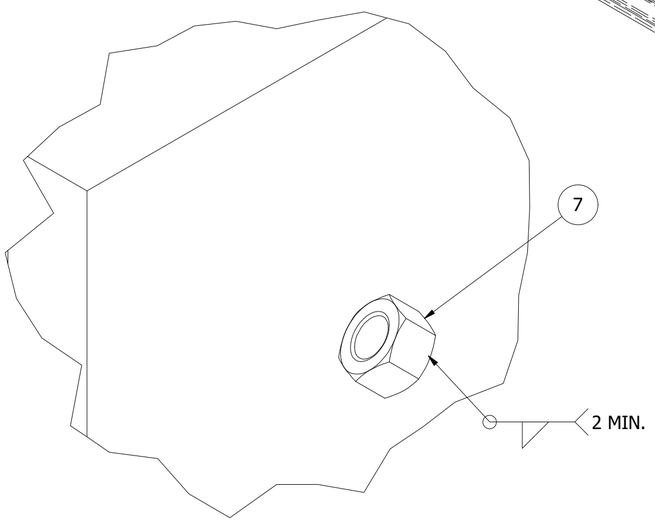

DETAIL: ITEM 7
SCALE 0.5 : 1

PARTS LIST			
ITEM	QTY	PART NO.	DESCRIPTION
1	1	H3NE-B	Enclosure Body
2	1	H3NE-D	Enclosure Door (SUPPLIER DETAILED)
3	2	H3NE-SB	Side Panel - Blank
4	2	H3NE-SF	Side Panel Frame
5	1	H3NE-FF	Floor Frame
6	1		M10 Galv. Hex Nut
7	1		NPT 1" - 11.5 Galv. Hex Nut
8	64		M5 x 16 S/Steel hexagon socket head cap screw
9	64		M5 S/Steel Hex Nut

DRAWN KA ROSIE	2016/12/03	SKA SA - HERA PROJECT
CHECKED Z ABDURASHIDOVA		TITLE
QA		ENCLOSURE ASSEMBLY
MFG		
APPROVED D DEBOER		
		SIZE A2 — 3rd ANGLE PROJECTION — DWG NO H3NE — REV A
		SCALE 0.15 : 1 — SHEET 1 OF 1

NOTES:
1) Exterior to be powder-coated and painted white
2) Interior to be unpainted, but protected with suitable conductive coating