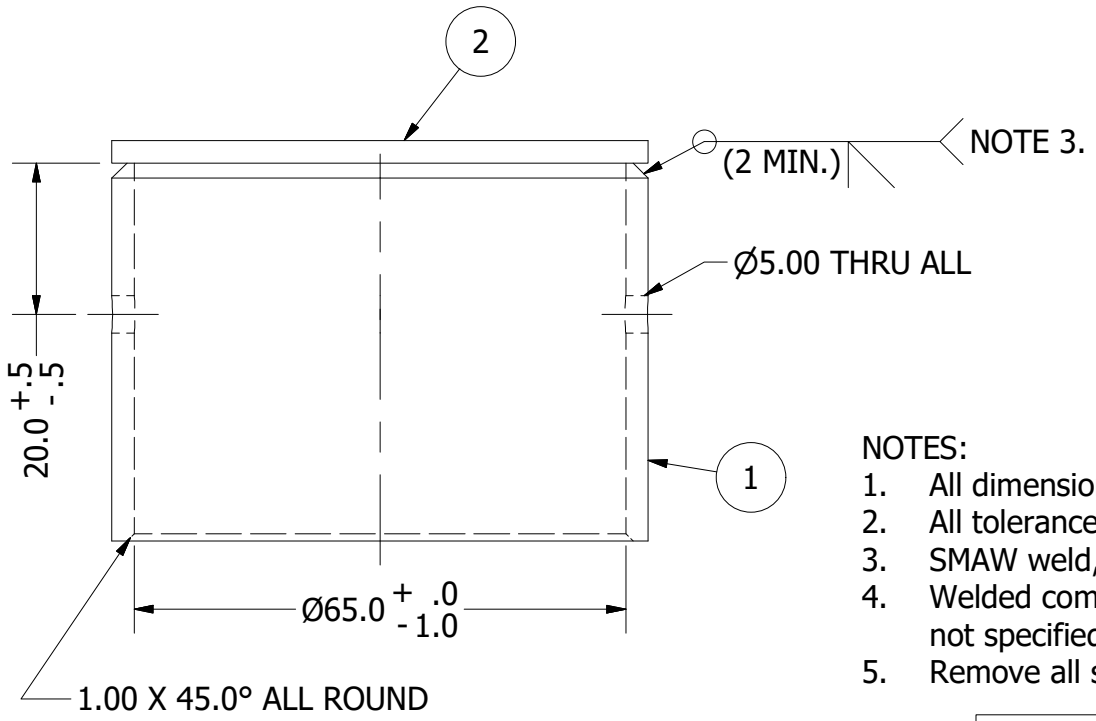

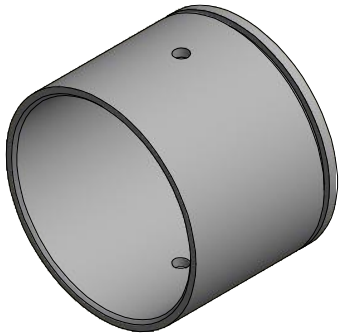

NOTES:
1. All dimensions in millimetres unless otherwise specified
2. All tolerances +/- 1mm unless otherwise specified
3. SMAW weld, subject to visual inspection in accordance with AWS D1.1
4. Welded component to be galvanised after welding (type of galvanising not specified)
5. Remove all sharp edges

PARTS LIST

ITEM	QTY	DESCRIPTION
1	1	MILD STEEL PIPE
2	1	3mm MILD STEEL PLATE

DRAWN KA ROSIE	2017/02/15
CHECKED M MAREE	
QA	
MFG	
APPROVED D DEBOER	

SKA SA - HERA PROJECT

TITLE

HUB PVC HOLE JIG (63mm PVC)

SIZE	DWG NO	REV
A4	H7JD	A

3rd ANGLE PROJECTION

SCALE 1 : 1

SHEET 1 OF 1

HERA

SKA AFRICA
SQUARE KILOMETRE ARRAY