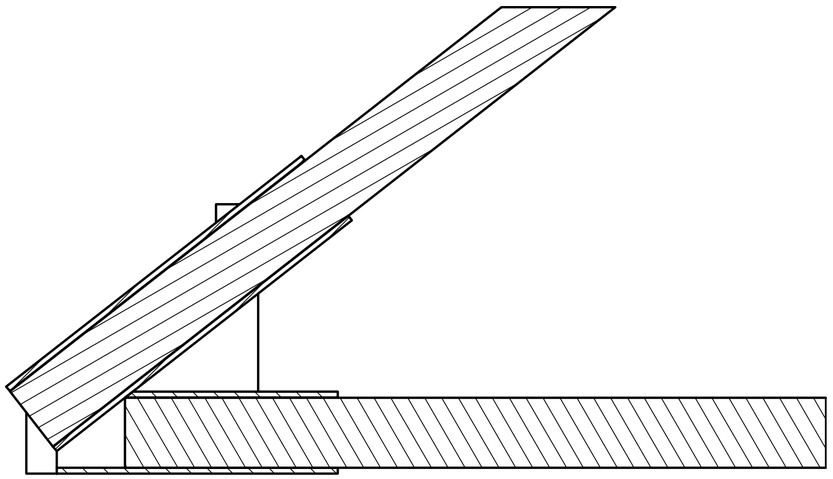

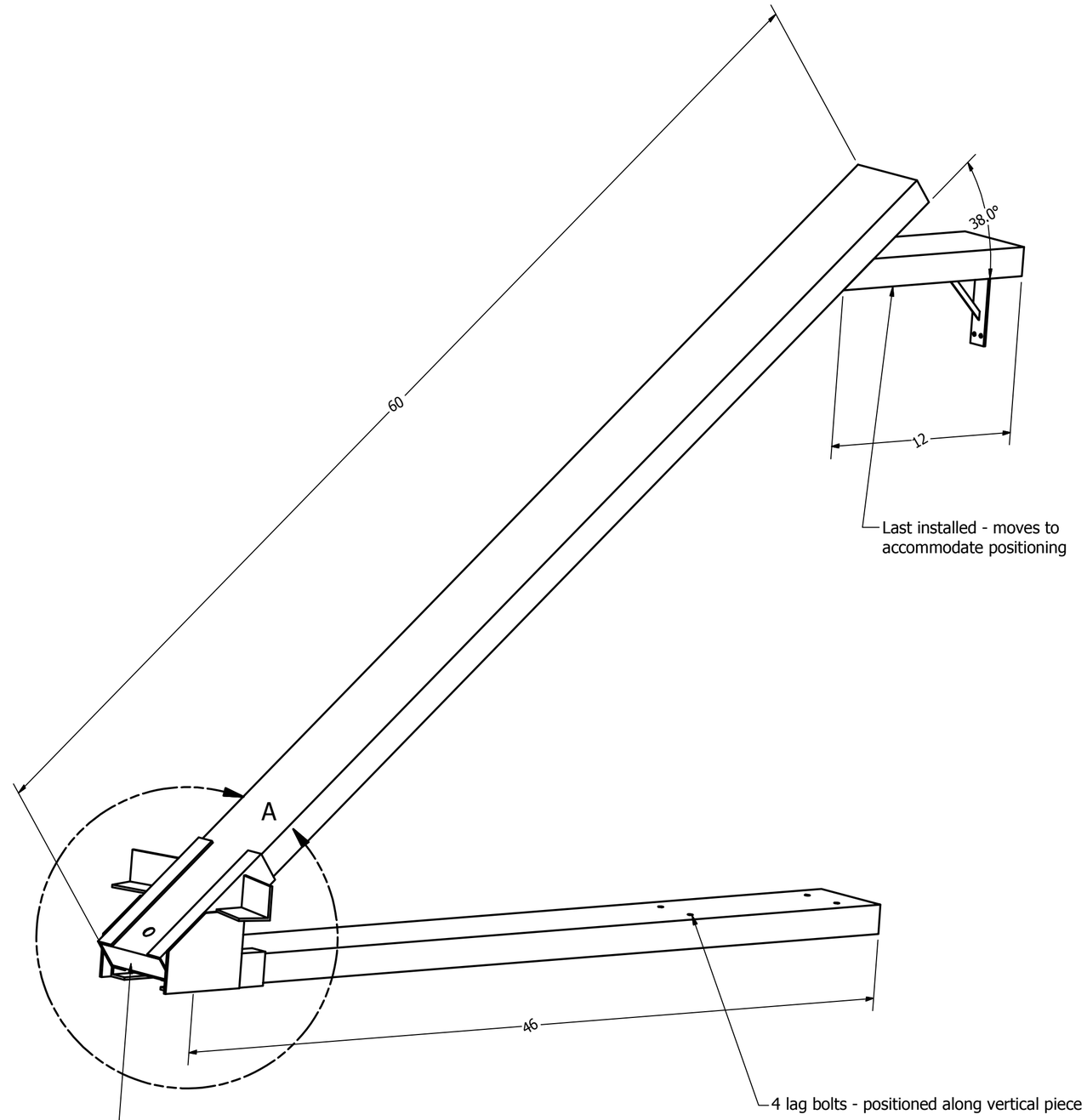

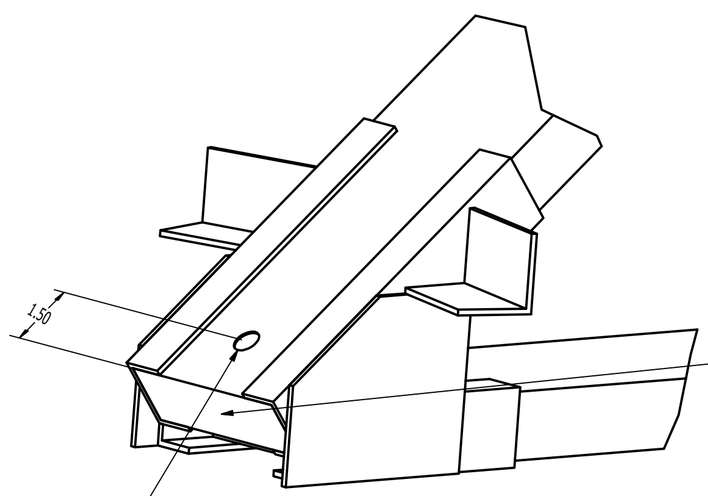

DETAIL A
SCALE 0.40 : 1

Flush to end

2"x4" pieces
dimensions in inches
Qty 3

DRAWN Dave	3/30/2015	HERA Collaboration
CHECKED		TITLE
QA		HERA Pole Horizontal Ass'y
MFG		
APPROVED		
		SIZE C / DWG NO H1pl.h_Ufa / REV A
		SCALE / SHEET 1 OF 1