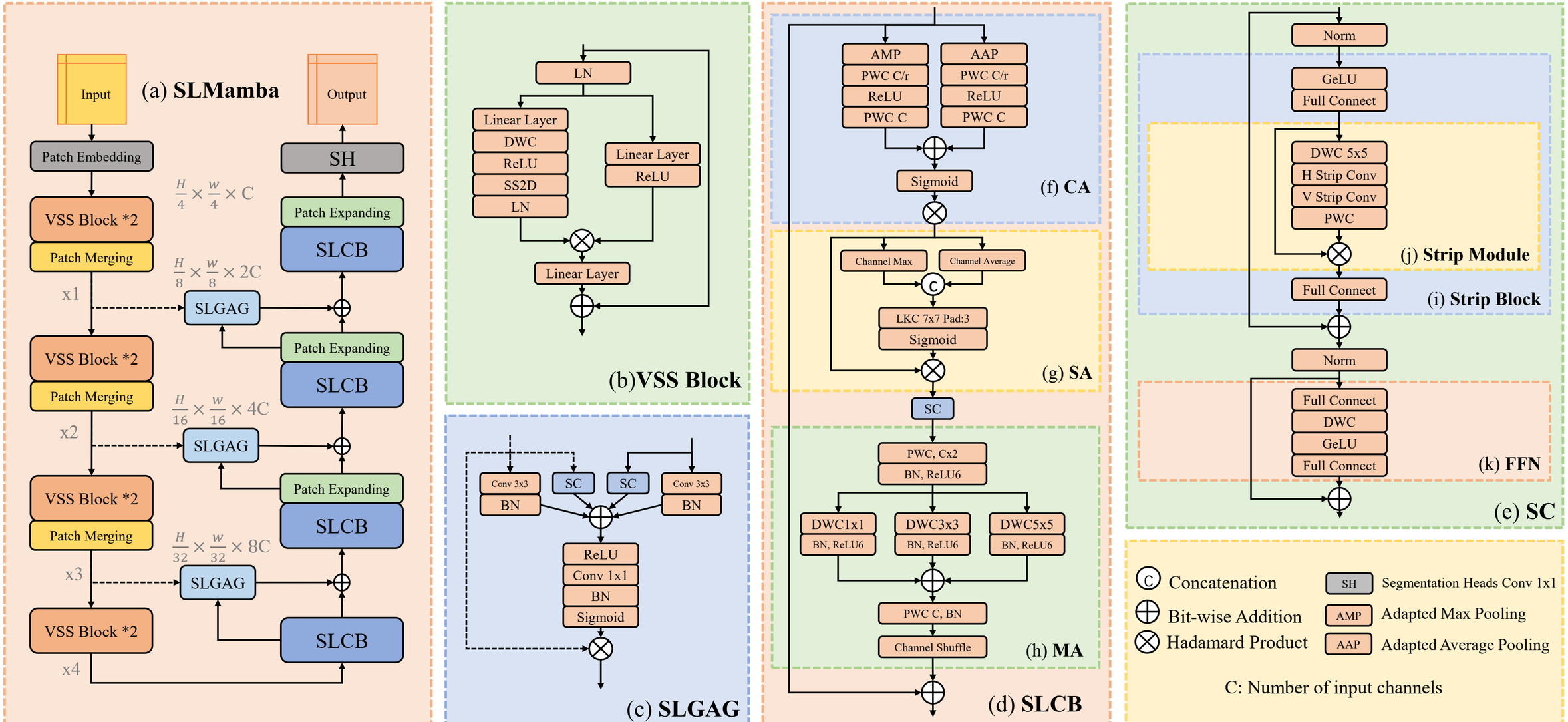
(a) SLMamba
Input
Output
Patch Embedding
VSS Block *2
Patch Merging
x1
x2
x3
x4
SLGAG
SLCB
Patch Expanding
SH
$\frac{H}{4} \times \frac{W}{4} \times C$
$\frac{H}{8} \times \frac{W}{8} \times 2C$
$\frac{H}{16} \times \frac{W}{16} \times 4C$
$\frac{H}{32} \times \frac{W}{32} \times 8C$
(b)VSS Block
LN
Linear Layer
DWC
ReLU
SS2D
(c) SLGAG
Conv 3x3
BN
SC
Conv 1x1
Sigmoid
(d) SLCB
AMP
AAP
PWC C/r
PWC C
(f) CA
Channel Max
Channel Average
LKC 7x7 Pad:3
(g) SA
PWC, Cx2
BN, ReLU6
DWC1x1
DWC3x3
DWC5x5
PWC C, BN
Channel Shuffle
(h) MA
Norm
GeLU
Full Connect
DWC 5x5
H Strip Conv
V Strip Conv
PWC
(j) Strip Module
(i) Strip Block
(k) FFN
(e) SC
Concatenation
Bit-wise Addition
Hadamard Product
Segmentation Heads Conv 1x1
Adapted Max Pooling
Adapted Average Pooling
C: Number of input channels