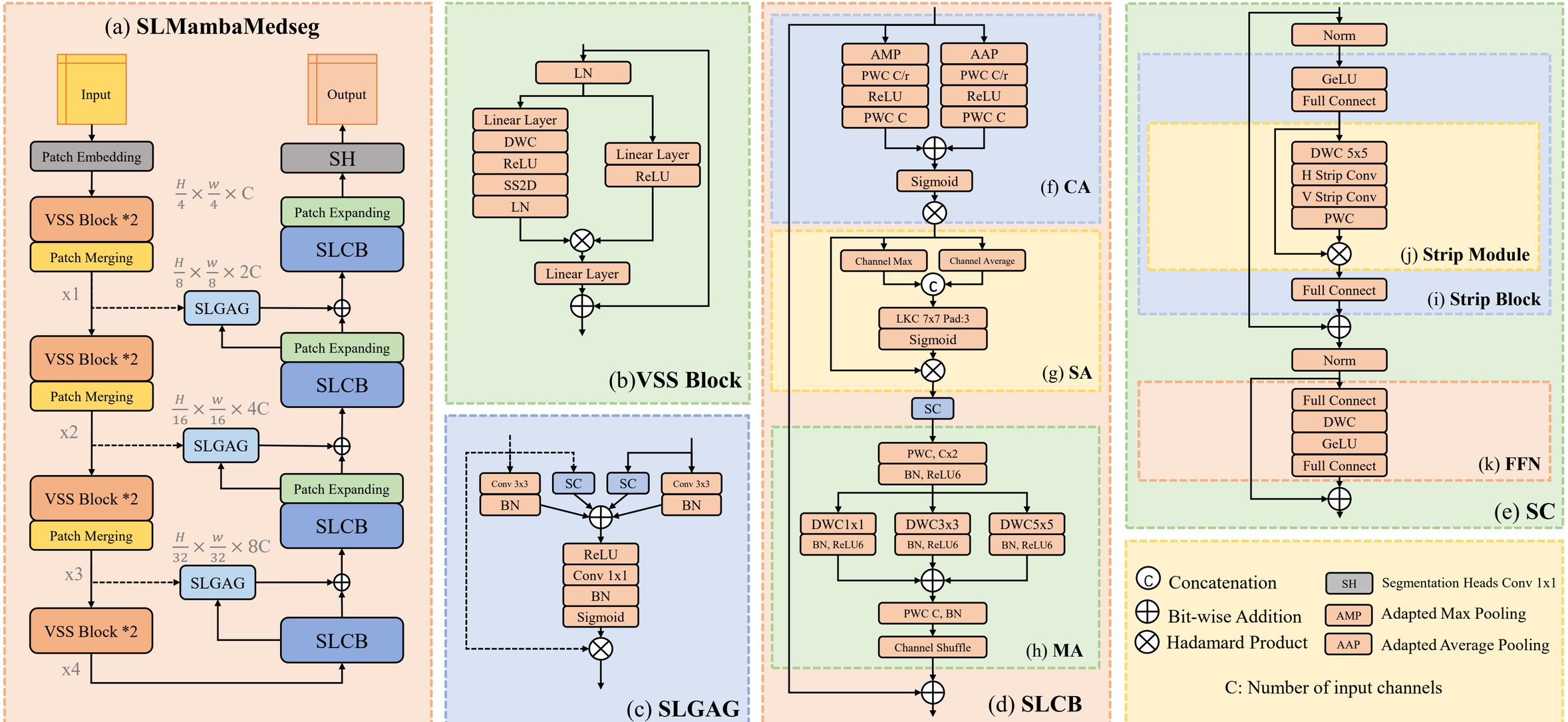
(a) SLMambaMedseg
Input
Output
Patch Embedding
SH
$\frac{H}{4} \times \frac{w}{4} \times C$
VSS Block *2
Patch Expanding
Patch Merging
SLCB
$\frac{H}{8} \times \frac{w}{8} \times 2C$
x1
SLGAG
VSS Block *2
Patch Expanding
Patch Merging
SLCB
$\frac{H}{16} \times \frac{w}{16} \times 4C$
x2
SLGAG
VSS Block *2
Patch Expanding
Patch Merging
SLCB
$\frac{H}{32} \times \frac{w}{32} \times 8C$
x3
SLGAG
VSS Block *2
SLCB
x4
LN
Linear Layer
DWC
ReLU
SS2D
LN
Linear Layer
ReLU
Linear Layer
(b)VSS Block
Conv 3x3
BN
SC
SC
Conv 3x3
BN
ReLU
Conv 1x1
BN
Sigmoid
(c) SLGAG
AMP
PWC C/r
ReLU
PWC C
AAP
PWC C/r
ReLU
PWC C
Sigmoid
(f) CA
Channel Max
Channel Average
C
LKC 7x7 Pad:3
Sigmoid
(g) SA
SC
PWC, Cx2
BN, ReLU6
DWC1x1
BN, ReLU6
DWC3x3
BN, ReLU6
DWC5x5
BN, ReLU6
PWC C, BN
Channel Shuffle
(h) MA
(d) SLCB
Norm
GeLU
Full Connect
DWC 5x5
H Strip Conv
V Strip Conv
PWC
(j) Strip Module
Full Connect
(i) Strip Block
Norm
Full Connect
DWC
GeLU
Full Connect
(k) FFN
(e) SC
Concatenation
Bit-wise Addition
Hadamard Product
SH
Segmentation Heads Conv 1x1
AMP
Adapted Max Pooling
AAP
Adapted Average Pooling
C: Number of input channels