1. Introduction

The VCM switch / input selector switch is a critical component of the SAR ADC, responsible for accurately capturing the input signal and securing the sampled charge within the capacitor array. Each capacitor effectively interfaces with two switching elements: top-plate switches (the VCM switch) and bottom-plate switches (input selector switch / MUX switches).

Because the VCM switch is common to all top plates and the input selector switch is common to all bottom plates, they dominantly contribute to the total array's dynamic behavior compared to the MUX switches (available for each unit capacitor), which are distributed across multiple capacitor banks. Given that the positive and negative capacitor arrays are identical and feature two separate VCM switches / input selector switches, this analysis focuses on sizing a single VCM switch / input selector switch.

2. Design Considerations

Sizing the VCM switch / input selector switch involves balancing several key performance metrics:

- **CDAC Settling Time:** Determines the maximum allowable on-resistance (R_{on}).
- **Switch Non-linearities:** The dependence of R_{on} on the input voltage (V_{in}) and capacitor voltage (V_{cap}).
- **Holding Time & Charge Leakage:** Ensuring the captured charge does not degrade significantly during the conversion phase.
- **Charge Injection & Clock Feedthrough:** Minimizing errors introduced during the switch turn-off event.

For the sizing of the VCM switch, extreme care should be taken regarding both the R_{on} and I_{leak} constraints, which impose opposite sizing requirements.

For the sizing of the input selector switch, the I_{leak} constraint can be relaxed since it is connected to the bottom plate, and strict enforcement of charge conservation on the bottom plate is not necessary. Therefore, we can take actions to minimize the R_{on}. Care should be taken to minimize charge injection in both switches.

3. Array Capacitance

Based on previous capacitor array sizing calculations, the unit capacitor (C_u) implementation was chosen to be 4.5 µm × 4.5 µm, yielding approximately 43.92 fF.

For an 8-bit architecture, the total capacitance per array (C_{array}) is:

$$C_{array} = 43.92 \text{ fF} \times 256 = 11.244 \text{ pF}$$

4. Settling Time and Maximum R_{on} Criteria

To analyze the switch-on state, the input switch is modeled as a static resistor (R_{on}).

4.1 Worst-Case Voltage Step

Assume the maximum voltage step across the capacitor array is $V_{ref} = 0.9$ V (effectively $2V_{ref} = 1.8$ V differentially). While a full-scale step is highly unlikely during normal continuous tracking operation, designing for this worst-case scenario guarantees robust settling under all conditions. The voltage settling on the capacitor follows:

$$V_{cap}(t) = V_0 \left(1 - e^{-t/\tau}\right)$$

Where the time constant is $\tau = R_{on} \cdot C_{array}$.

4.2 Settling Time Target

We allocate 0.5 of a clock period for the capacitor settling time. For a relaxed 100 kHz clock, $T_{clk} = 10 \backslash \mathrm{mu\ s}$ (providing a tighter margin than the standard 96 kHz clock). The available settling time (t_{settle}) is **5 µs**.

4.3 Resolution Requirement

To ensure the sampled voltage represents the true input accurately, the settling error by the end of the sampling phase (t_{settle}) must be less than 0.5 LSB. The worst-case voltage error at time t is:

$$V_{error}(t) = V_0 e^{-t/\tau}$$

We require $V_{error}(t_{settle}) < 0.5\ \mathrm{LSB}$. Since $1\ \mathrm{LSB} = \frac{V_{FS}}{2^N}$, $0.5\ \mathrm{LSB} = \frac{V_{FS}}{2^{N+1}}$. *(Note that V_{FS} cancels out, making the required R_{on} independent of the 0.9 V reference. V_{FS}= 2 V_{ref} and $V_0 = V_{ref}$).*

$$\begin{aligned} V_0 e^{-t_{settle}/\tau} &< \frac{V_{FS}}{2^{N+1}} \\ e^{-t_{settle}/\tau} &< 2^{-(N)} \\ \frac{t_{settle}}{\tau} &> (N)\ln(2) \end{aligned}$$

(Note: While $N \ln(2)$ is for differential case, rigorous 0.5 LSB settling for a worst-case full-scale step requires $(N+1)\ln(2)$ which can be seen in single ended cases where (V_{FS} \) = (V_{ref} \) . We will choose this criteria to favor accuracy.)

$$R_{on} \leq \frac{t_{settle}}{C_{array} \cdot (N+1) \cdot \ln(2)}$$

4.4 R_{on} Calculation

Substituting the physical design values ($t_{settle} = 5 \times 10^{-6}\ \mathrm{s}, N = 8, C_{array} = 11.244 \times 10^{-12}\ \mathrm{F}$):

$$R_{on} \leq \frac{5 \times 10^{-6}}{11.244 \times 10^{-12} \times (8+1) \times 0.693} \approx \mathbf{71.3\ k\Omega}$$

Conclusion: *The upper bound for the VCM switch / input selector switch on-resistance (R_{on}) is 71.3 kΩ. To account for PVT variations and switch non-linearities, the switch should be sized such that its peak resistance remains well below this threshold across all operating conditions. This is a very loose constraint for the R_{on}*

5. Capacitor Array Leakage Current Analysis

5.1 Circuit Modeling

To analyze the leakage current, we model the capacitor array (C_{array}) with VCM switches and combined bottom-plate switches. For a single side of the differential array, the simplified model is:

- V_{in} is connected through an "off" resistance (r_{off}) to the top plate of the capacitor.
- The capacitor C_{array} is in series with another "off" resistance (r_{off}) connected to ground.
- V_{cap} represents the voltage across the capacitor array.

5.2 Leakage Analysis Equations

For the leakage analysis, we use the fundamental charge equation:

$$Q_{cap} = C_{array} \cdot V_{cap}$$

For a small time interval (Δt), the change in charge relates to the change in voltage as follows:

$$\frac{\Delta Q_{cap}}{\Delta t} = C_{array} \frac{\Delta V_{cap}}{\Delta t}$$

The term $\frac{\Delta Q_{cap}}{\Delta t}$ represents the leakage current ($I_{leakage}$). Therefore:

$$I_{leakage} = C_{array} \frac{\Delta V_{cap}}{\Delta t}$$

5.3 Determining Worst-Case Parameters

To find the maximum allowable leakage current, we need the minimum allowable voltage drop (ΔV_{min}) and the maximum hold time (Δt_{max}).

Calculating Δt_{max} (Hold Period):

- **Design frequency (min):** 96 kHz
- **Clock Period (t):** $\frac{1}{96\text{ kHz}} \approx 10.42\ \mu\text{s}$
- **Hold Periods:** The conversion takes multiple clock cycles (8 clocks for a single SAR conversion). To account for noise shaping and a safety margin, we assume the hold state lasts for 11 out of 12 clock cycles per conversion.
- **Calculation:** $11 \times 10.42\ \mu\text{s} = 114.62\ \mu\text{s}$
- **Result:** $\Delta t_{max} \approx \mathbf{115\ \mu s}$

5.4 Maximum Allowable Voltage Drop

The maximum allowable voltage drop per array is defined as half of the Least Significant Bit (LSB) voltage to maintain conversion accuracy:

$$\Delta V = \frac{V_{LSB}}{2} = \frac{2V_{ref}}{2^{N+1}} = \frac{0.9}{2^9}$$

(Note: "0.9 / 2^9", is used for 8-bit resolution where the margin is applied at $N+1$ to account for errors introduced by both arrays.)

ΔV_{min} **calculation:** $\frac{0.9}{512} \approx \mathbf{1.7578125\ mV}$

5.5 Maximum Leakage Current Calculation

Using the values derived above and a capacitor array value of $11.244\ \mathrm{pF}$:

$$I_{leakage_max} = 11.244\ \mathrm{pF} \times \frac{1.7578125\ \mathrm{mV}}{115\ \mu\mathrm{s}}$$

$$I_{leakage_max} = \mathbf{171.858\ pA}$$

Design Limit:
To ensure stability and accuracy, the allowable leakage must be less than the calculated limit:

$$I_{leakage_allowable} < I_{leakage_limit} = \mathbf{170\ pA}$$

5.6 Design Recommendations

By using this design limit, the following constraints are established for the system:

- Use capacitor arrays where $C_{array} > 11.244\ \mathrm{pF}$ (larger capacitance reduces the voltage droop for a fixed leakage).
- Maintain a clock frequency $f_{clk} > 96\ \mathrm{kHz}$ (higher frequencies shorten the hold time, reducing the impact of leakage).

6. VCM Switch FET Sizing Analysis

VCM FET sizing requires the consideration of both R_{on} and I_{leak}. Therefore, we will design the VCM switch to strictly satisfy the above requirements, and design the input selector switch to complement R_{on} since its I_{leak} constraint can be relaxed.

6.1 Design Strategy and Goals

The sizing of the transmission gate (TG) necessitates a careful optimization between on-resistance (R_{on}) and leakage current (I_{leak}). To mitigate charge injection effects through first-order cancellation, the NMOS and PMOS devices are symmetrically sized ($W_n = W_p$ and $L_n = L_p$).

- **To minimize R_{on}:** Channel length (L) must be minimized while width (W) is maximized.
- **To minimize I_{leak}:** Channel length (L) must be increased while width (W) is minimized.

6.2 Simulation Methodology and Test Environment

Robustness is verified by simulating the design across worst-case Process, Voltage, and Temperature (PVT) corners:

- **Worst-Case R_{on}:** Evaluated at the SS (Slow-Slow) process corner at -25°C, where carrier mobility is lowest.
- **Worst-Case I_{leak}:** Evaluated at the FF (Fast-Fast) process corner at 125°C, where subthreshold and junction leakage currents peak.

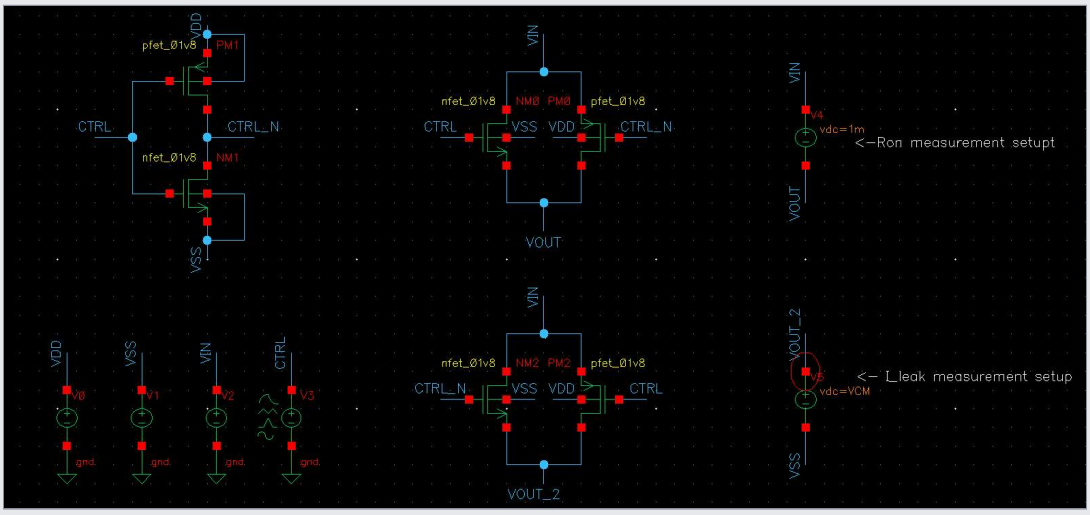

Description: *Cadence schematic illustrating the transmission gate setup with the capacitor array load and the DC/Parametric simulation sources.*

Testbench Configuration:

- R_{on} **Characterization:** A 1 mV differential is forced across the TG input and output, and the resulting current is measured to calculate resistance.
- I_{leak} **Characterization:** The TG output is biased at the common-mode voltage (V_{CM}), mirroring the SAR logic's tendency to drive the C_{array} top-plate toward V_{CM}. The input voltage is swept to evaluate leakage.

Simulation Strategy:

Initial parametric sweeps of W and V_{in} across discrete lengths (150 nm to 220 nm) revealed edge-case vulnerabilities:

- $L = 150\ \mathrm{nm}$**:** Displayed excessive I_{leak} at the upper limits of the input voltage range.
- $L = 220\ \mathrm{nm}$**:** Exhibited inadequate R_{on} performance near the mid-rail input voltages.

Consequently, the methodology was refined: V_{in} was fixed at the previously identified worst-case potentials (e.g., mid-rail for maximum R_{on}, and 0.05V / 1.75V for maximum I_{leak}, suppressing the absolute extremes to reflect realistic operational limits). W and L were then systematically swept to identify the optimal design boundary.

6.3 Parametric Sweep Results

The following tables summarize the design boundary conditions required to satisfy the established R_{on} and I_{leak} limits. Note that these values are approximations utilized to qualitatively guide the dimension selection process.

Table 1: R_{on} **Boundary Constraints (SS Corner, -25°C)**
Determines the maximum allowable L for a given W to satisfy the R_{on} upper bound.

Width (W)	Length (L) Limit	Status
3.0 µm	< 150 nm	✗ (Fail)
3.5 µm	< 154 nm	✓ (Pass)
4.0 µm	< 159 nm	✓ (Pass)
4.5 µm	< 164 nm	✓ (Pass)
5.0 µm	< 168 nm	✓ (Pass)
5.5 µm	< 176 nm	✓ (Pass)
6.0 µm	< 182 nm	✓ (Pass)
6.5 µm	< 190 nm	✓ (Pass)
7.0 µm	< 198 nm	✓ (Pass)
7.5 µm	< 205 nm	✓ (Pass)

Table 2: I_{leak} Boundary Constraints (FF Corner, 125°C)
Determines the minimum required L for a given W to strictly enforce the I_{leak} upper bound.

Width (W)	Length (L) Limit	Status
3.0 µm	> 224 nm	✓ (Pass)
3.5 µm	> 222 nm	✓ (Pass)
4.0 µm	> 221 nm	✓ (Pass)
4.5 µm	> 220 nm	✓ (Pass)
5.0 µm	> 220 nm	✓ (Pass)
5.5 µm	> 215.5 nm	✓ (Pass)
6.0 µm	> 211 nm	✓ (Pass)
6.5 µm	> 207.5 nm	✓ (Pass)
7.0 µm	> 204 nm	✓ (Pass)
7.5 µm	> 205 nm	✓ (Pass)

Note: Extreme rail conditions ($V_{in} \approx 0\text{V}$ and 1.8V) induce complex leakage mechanisms that fall outside the typical tracking envelope and were excluded from this specific boundary selection phase.

6.4 Proposed Device Sizes

Evaluating the parametric sweep results to identify the minimum device footprint that simultaneously satisfies both the R_{on} and I_{leak} constraints across all worst-case corners yields the following optimal dimensions:

- $W_n = W_p = 7.5\ \mu\text{m}$
- $L_n = L_p = 205\ \text{nm}$

6.5 Final Simulation Verification

Deploying the proposed physical dimensions, the final verification simulations confirm the design viability:

- **On-Resistance (R_{on}):** Evaluated under the SS corner at -25°C, the constraint $R_{on} < 71.2\ \text{k}\Omega$ is strictly satisfied across the dominant input range, demonstrating significant headroom compared to the initial boundaries.

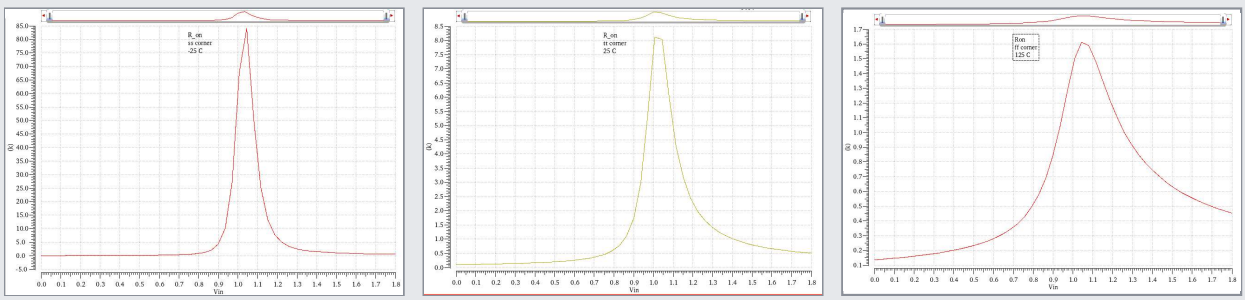

Description: *Plots illustrating the R_{on} curves across the 0V to 1.8V input span, capturing the peak resistance in the mid-rail region across different corners.*

- **Leakage Current (I_{leak}):** Evaluated under the FF corner at 125°C, the constraint $I_{leak} < 170\ \mathrm{pA}$ is strictly satisfied across the entire functional input range (excluding extreme rails).

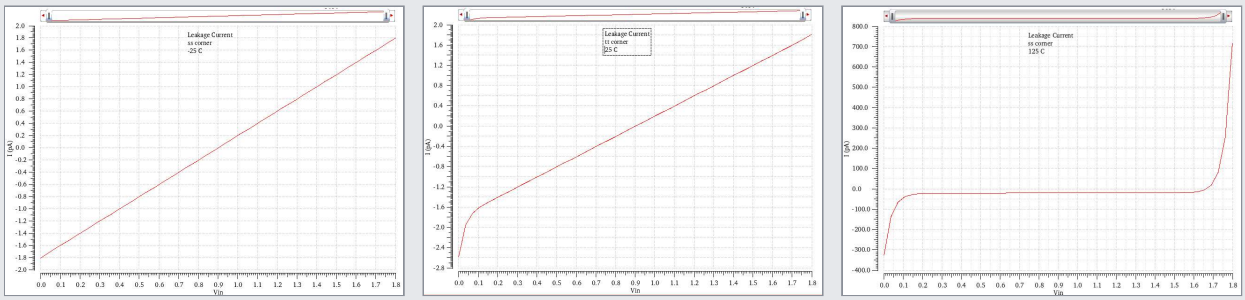

Description: *Plots illustrating leakage current versus input voltage, featuring a horizontal threshold marker at the 170 pA design limit across different corners.*

6.6 Design Rounding Considerations

If layout constraints necessitate rounding the channel length (L) to a standard grid, the dimensions can be adjusted to 200 nm or 210 nm:

- **Rounding to $L = 200\ \mathrm{nm}$:** Increases the leakage current (I_{leak}) significantly at the input voltage extremes.
- **Rounding to $L = 210\ \mathrm{nm}$:** Increases the peak on-resistance (R_{on}), particularly in the mid-rail region.

Recommendation: *It is recommended to round up to $L = 210\ \mathrm{nm}$ while slightly increasing the device width (e.g., $W = 7.6\ \mu\mathrm{m}$). The reasoning is that the rate at which R_{on} degrades is relatively lower compared to the exponential increase in I_{leak} at shorter channel lengths. Furthermore, the established R_{on} upper bound (71.3 kΩ) already contains significant redundancy, easily absorbing the minor resistance penalty introduced by this adjustment.*

7. Charge Injection and Switch Non-Linearities

7.1 Charge Injection Mitigation

To minimize the charge injection from the gate capacitance into the capacitor array (C_{array}) during the turn-off event, dummy switching devices are employed. Specifically, two dummy NMOS and two dummy PMOS devices are added alongside the active transmission gate devices. These dummy devices are sized with **half the width ($W/2$)** of the active devices and are driven by complementary clock signals to absorb the injected channel charge.

7.2 Switch Non-Linearities

To address switch non-linearities (such as the variation of R_{on} with the input voltage), a bootstrapped switch architecture is often considered. However, in this design, a bootstrapped switch will **not** be utilized. The primary reasons are the inherent limitations of operating with low-voltage devices, alongside the significant circuit complexity and area overhead it would introduce. The symmetrically sized transmission gate, coupled with the conservatively established R_{on} margins, provides sufficient linearity to satisfy the target 8-bit resolution.

8. Input Selector Sizing

8.1 Overview

The Input Selector is a multiplexer that selects a voltage from either V_{in} (differential V_{inp}/V_{inn}) or V_{ref} and feeds it to the capacitor array (unit capacitor muxes). This switching occurs during the sampling and conversion phases of the ADC.

8.2 Design Goals and Constraints

- **Primary Goal:** Minimize the On-Resistance (R_{on}) to ensure fast settling.
- **Constraints:** Area and charge injection must be managed.

> ***Note on Leakage:*** *Leakage currents are not a primary concern for accuracy at this stage. While they can impact power, they are overlooked in this initial design cycle.*

8.3 Device Sizing Selection

Initial simulations used the sizing from the Common-Mode (V_{CM}) switch. However, simulations under worst-case conditions (SS corner, -25°C) showed that the R_{on} was too high.

To address this, the width was held constant while the length was reduced to the process minimum to maximize drive strength and minimize resistance.

Proposed Design Device Dimensions:

- $W_p = W_n = 7.5\ \mu\text{m}$ (aligned with V_{CM} switch width)
- $L_p = L_n = 150\ \text{nm}$ (Minimum Length)

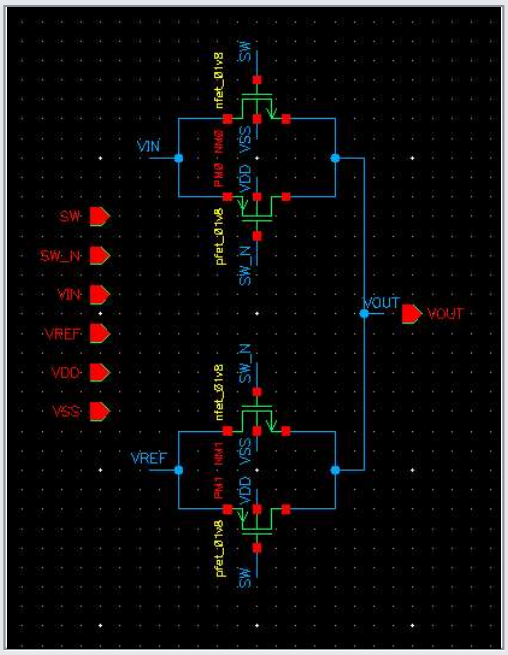

Description: Schematic showing the two transmission gates (one for V_{in}, one for V_{ref}) connected to a common output node.

9. Capacitor Array Unit Cell Mux Sizing

9.1 Settling Considerations

For the unit capacitor cell, the sizing is governed strictly by R_{on} requirements. Since the bottom plate is always connected to an external supply during these phases, leakage (I_{leak}) is not a critical consideration. The calculation follows the settling time requirement for an N-bit converter.

9.2 Resistance Calculations

The required R_{on} is derived from the settling time (τ) needed to reach the required accuracy:

$$R_{on} \leq \frac{t_{settle}}{C_{unit} \cdot (N+1) \cdot \ln(2)}$$

Using the following parameters (with slight variations between simulated and calculated capacitance):

- $t_{settle} = 5\ \mu\text{s}$
- $C_{unit} \approx 48.45\ \text{fF}$
- $N = 8$ bits

$$R_{on} \leq \frac{5 \times 10^{-6}}{48.45 \times 10^{-15} \cdot (8+1) \cdot 0.693} \approx 18.45\ \text{M}\Omega$$

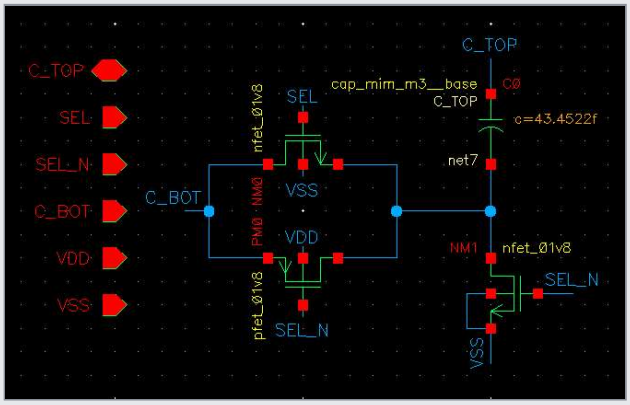

Description: A diagram showing the unit capacitor with its associated NMOS/PMOS switches for selecting V_{in}/V_{ref} or GND.

9.3 Effective Resistance and Implementation

When considering the parallel operation of the array, the effective resistance limit for the combined muxes is:

$$R_{on,eff,mux} \leq \frac{18.45\ \text{M}\Omega}{2^8} \approx 72\ \text{k}\Omega$$

This resistance is the total resistance (total mux resistance in series with the V_{CM} switch and the Input Select R_{on}). This implies that the individual unit mux switches should have extremely low resistances to not dominate the RC constant(The previusly calculated R_{on} upper limit is lower than this value).

If we assume the total effective resistance of all switches is roughly $1\ \mathrm{k}\Omega$, then the R_{on} for a single unit mux switch would be:

$$R_{on} = 1\ \mathrm{k}\Omega \times 256 = 256\ \mathrm{k}\Omega$$

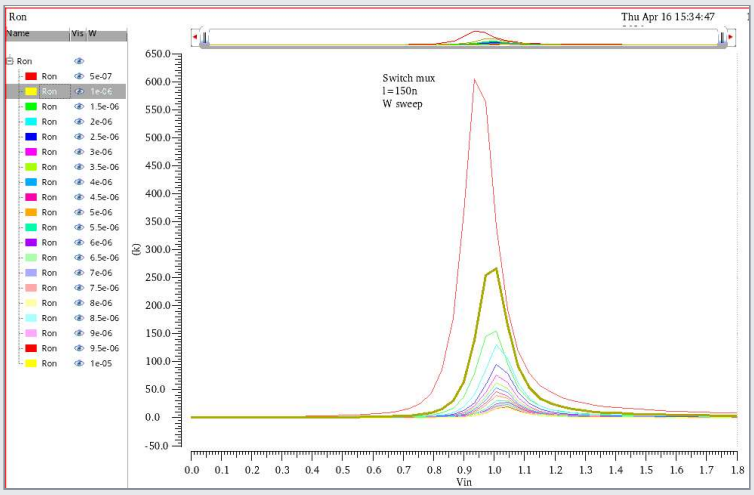

Description: A plot showing the parametric sweep with minimum length and varying width

Conclusion: *This target is easily achievable using standard transistors with relatively small gate widths. According to simulations, a width (W) greater than 1µm with the minimum length ($L = 150\ \mathrm{nm}$) is sufficient to meet the R_{on} target. The final dimensions can be optimized based on layout area availability, allowing for a compact layout of the capacitor array.*