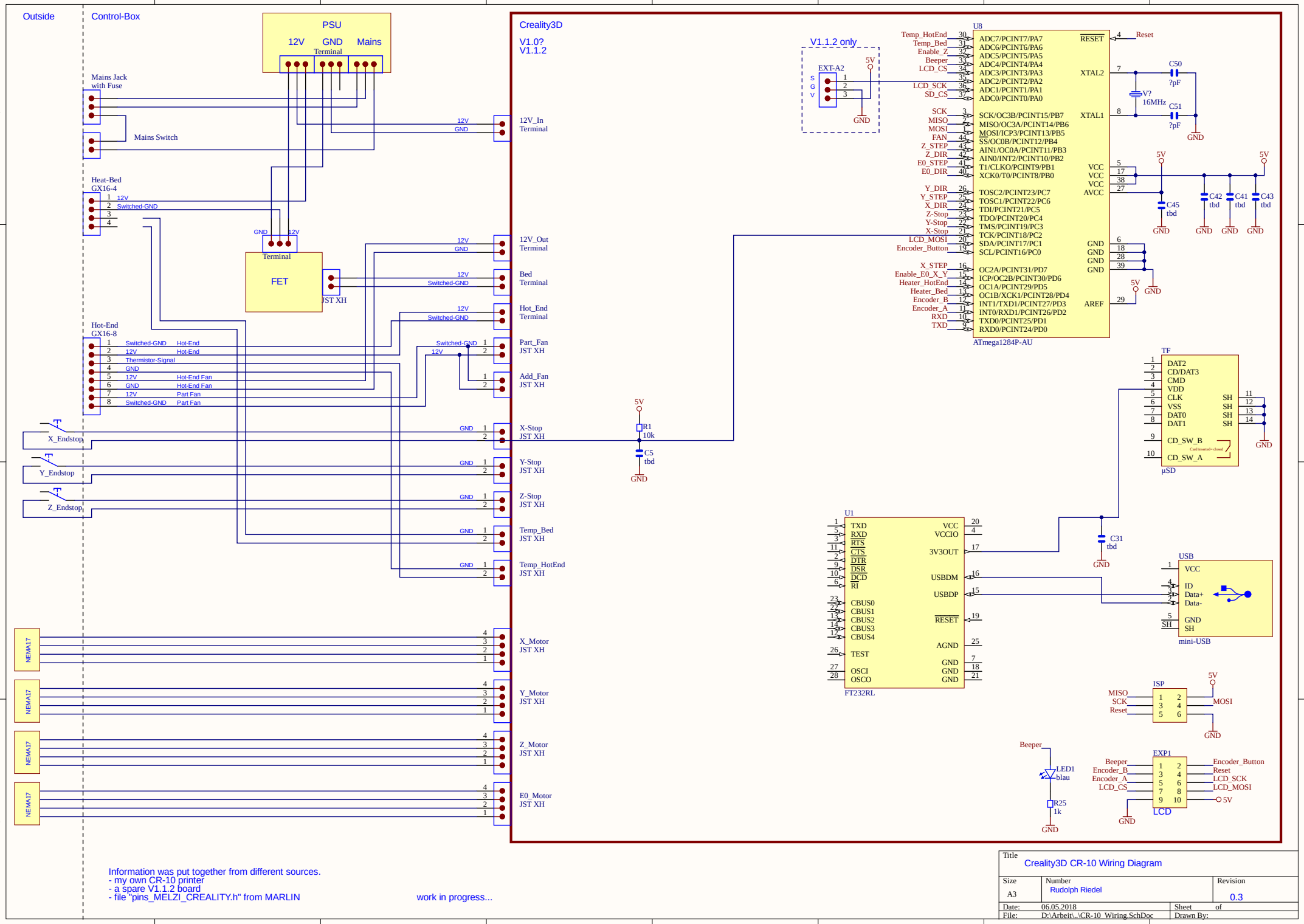
Outside
Control-Box
PSU
12V
GND
Mains
Terminal
Mains Jack with Fuse
Mains Switch
Heat-Bed GX16-4
Hot-End GX16-8
FET
JST XH
Creality3D
V1.0?
V1.1.2
12V_In Terminal
12V_Out Terminal
Bed Terminal
Hot_End Terminal
Part_Fan JST XH
Add_Fan JST XH
X-Stop JST XH
Y-Stop JST XH
Z-Stop JST XH
Temp_Bed JST XH
Temp_HotEnd JST XH
X_Motor JST XH
Y_Motor JST XH
Z_Motor JST XH
E0_Motor JST XH
X_Endstop
Y_Endstop
Z_Endstop
NEMA17
V1.1.2 only
EXT-A2
U8
ATmega1284P-AU
U1
FT232RL
TF
µSD
USB
mini-USB
ISP
EXP1
LCD
LED1
blau
R25
1k
R1
10k
C5
tbd
C31
tbd
C50
?pF
C51
?pF
V?
16MHz
C45
tbd
C42
tbd
C41
tbd
C43
tbd
Information was put together from different sources.
- my own CR-10 printer
- a spare V1.1.2 board
- file "pins_MELZI_CREALITY.h" from MARLIN
work in progress...
Title
Creality3D CR-10 Wiring Diagram
Size
A3
Number
Rudolph Riedel
Revision
0.3
Date:
06.05.2018
Sheet
of
File:
D:\Arbeit\..\CR-10_Wiring.SchDoc
Drawn By: