RadioRepeater

Variant: [No Variations]

15.12.2021
v1.0

DRAFT

Page	Index	Page	Index	Page	Index	Page	Index
1	COVER PAGE	11	.....	21	.....	31	.....
2	BLOCK DIAGRAM	12	.....	22	.....	32	.....
3	MCU,CONTROLS	13	.....	23	.....	33	.....
4	RADIO	14	.....	24	.....	34	.....
5	AUDIO	15	.....	25	.....	35	.....
6	POWER	16	.....	26	.....	36	.....
7	DOC REVISION HISTORY	17	.....	27	.....	37	.....
8	.....	18	.....	28	.....	38	.....
9	.....	19	.....	29	.....	39	.....
10	.....	20	.....	30	.....	40	.....

DESIGN CONSIDERATIONS

DESIGN NOTE:
Example text for informational design notes .

DESIGN NOTE:
Example text for critical design notes.

DESIGN NOTE:
Example text for cautionary design notes.

LAYOUT NOTE:
Example text for critical layout guidelines.

CONFIDENTAL. Do not distribute.

	PROJECT: RadioRepeater		
	PAGE CONTENTS: [01] - COVER PAGE.SchDoc		
ENGINEER: V.Nikolaenko	SIZE: A3	VARIANT: [No Variations]	REVISION: v1.0
APPROVED BY: [Not Approved]	DATE: 15.12.2021		SHEET: 1 of 7

RadioRepeater
(Block Diagram)

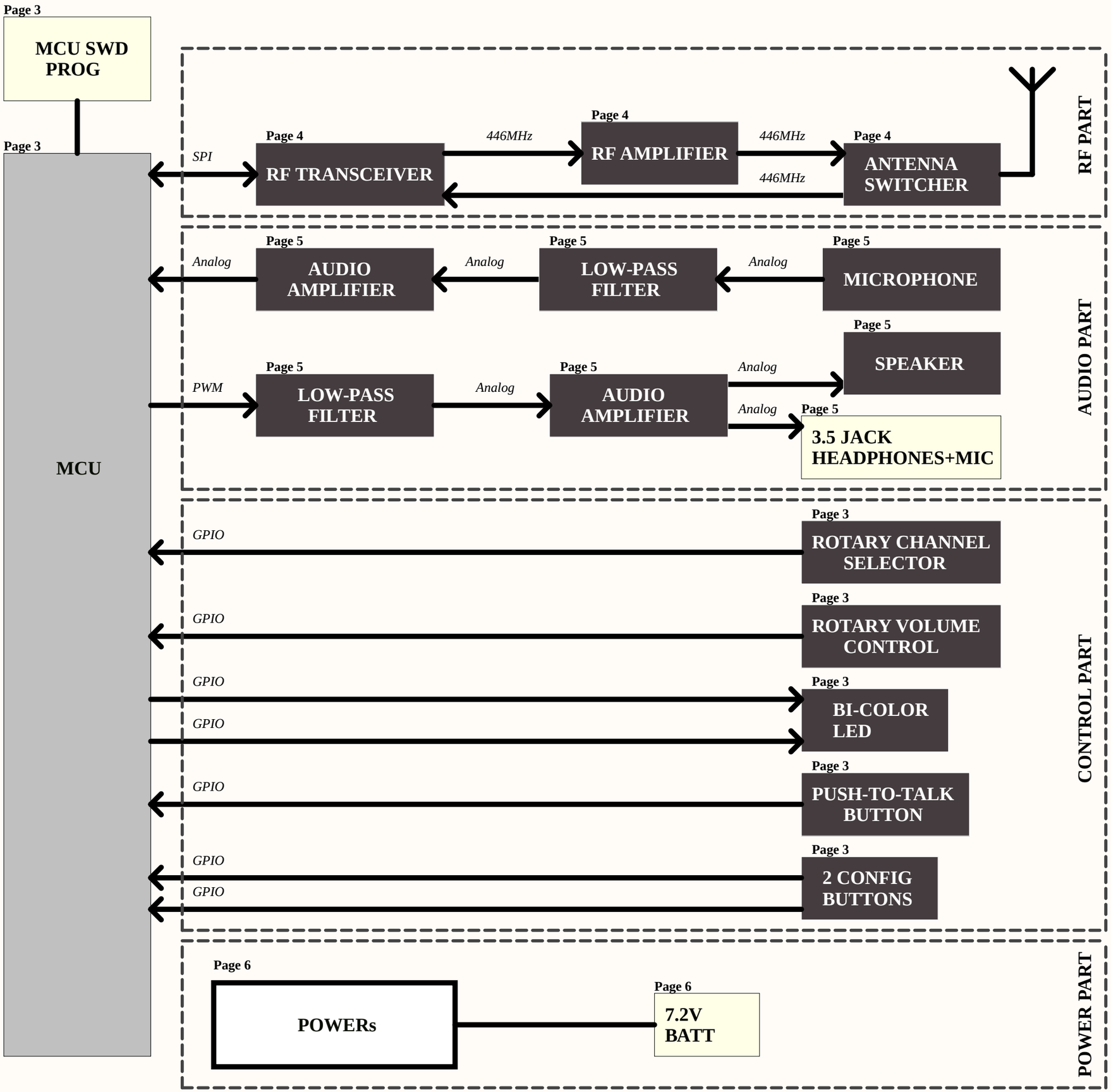

CONFIDENTAL. Do not distribute.	PROJECT RadioRepeater		
	PAGE CONTENTS [02] - BLOCK DIAGRAM.SchDoc		
ENGINEER V.Nikolaenko	SIZE A3	VARIANT [No Variations]	REVISION v1.0
APPROVED BY [Not Approved]	DATE 15.12.2021		SHEET 2 of 7

MCU, CONTROLS

MCU

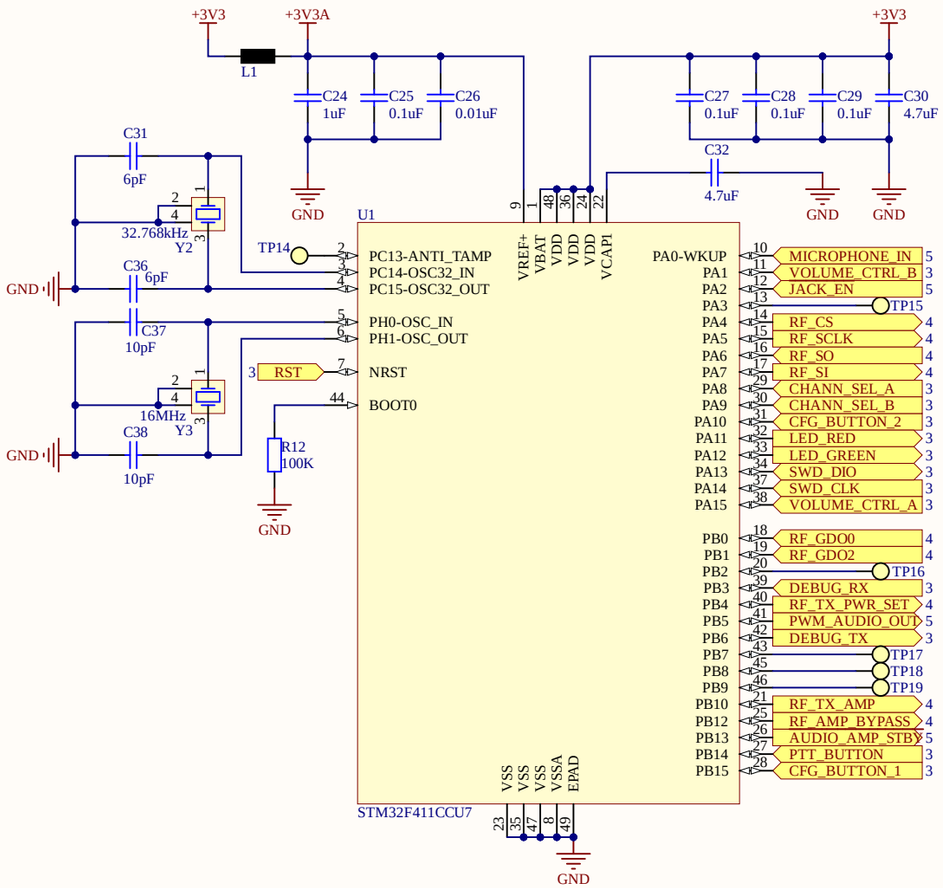

Push-To-Talk Button

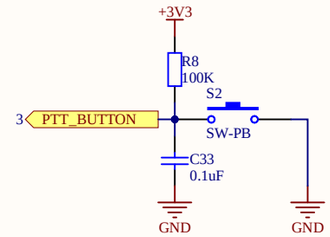

Channel Selector

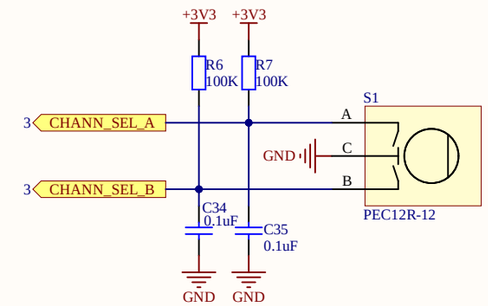

Config Buttons

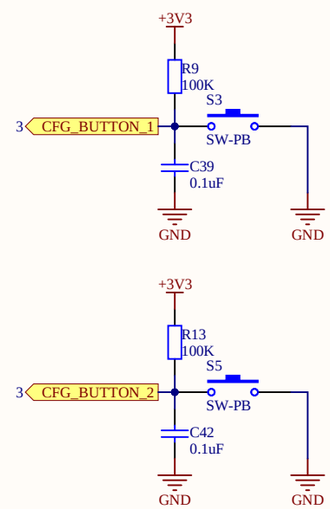

Volume Control

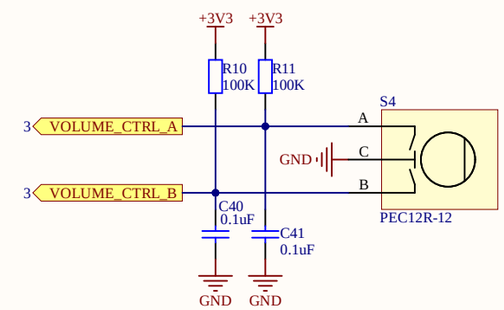

2-Color LED

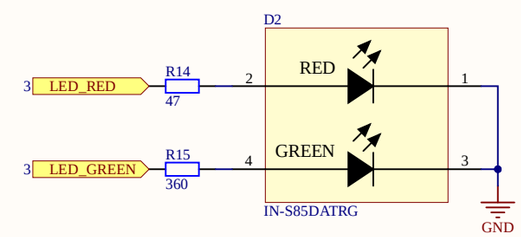

SWD Connector

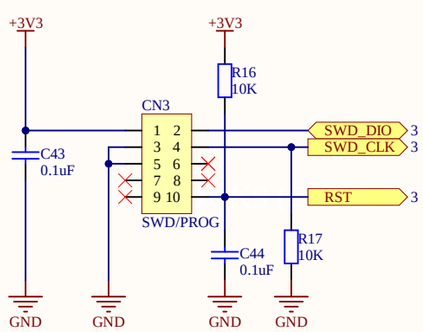

Debug UART

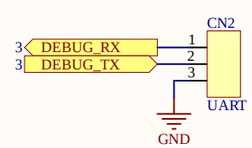

CONFIDENTAL. Do not distribute.	PROJECT: RadioRepeater		
	PAGE CONTENTS: [03] - MCU,CONTROLS.SchDoc		
ENGINEER: V.Nikolaenko	SIZE: A3	VARIANT: [No Variations]	REVISION: v1.0
APPROVED BY: [Not Approved]	DATE: 15.12.2021		SHEET: 3 of 7

RADIO

RF Amplifier

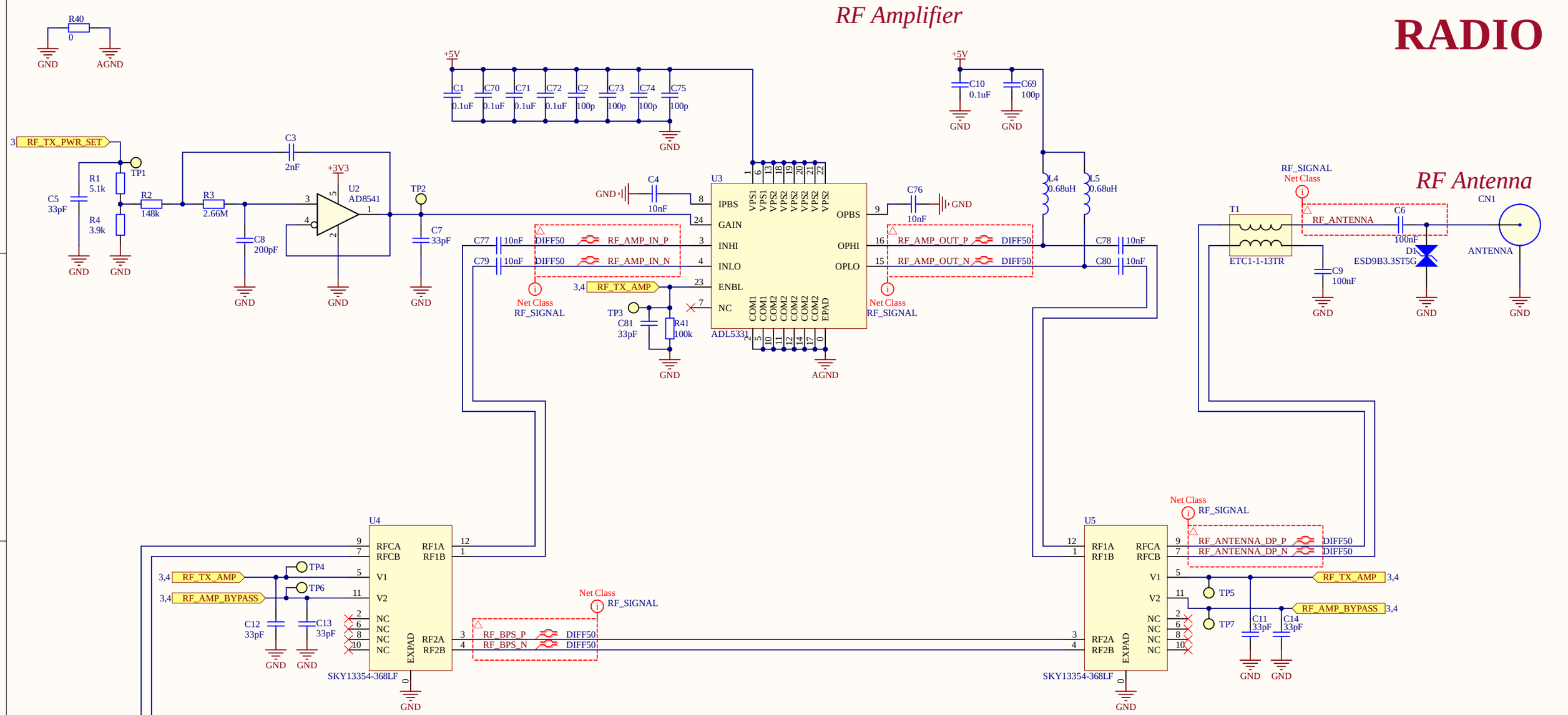

RF Antenna

RF Transceiver

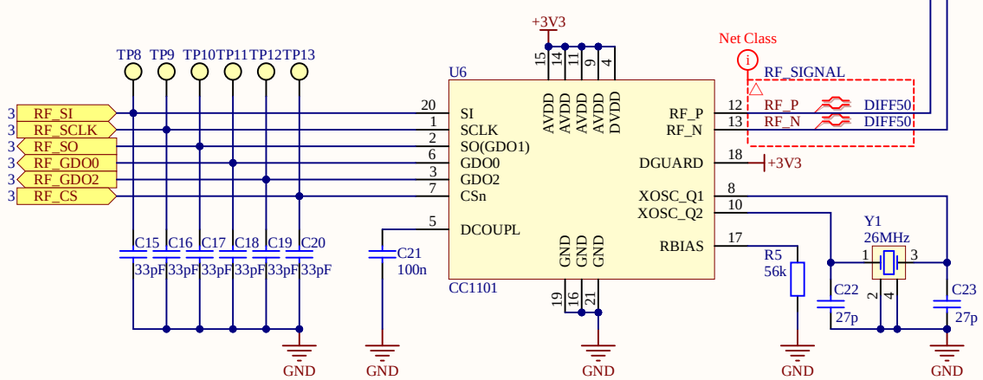

CONFIDENTAL. Do not distribute.	PROJECT: RadioRepeater		
	PAGE CONTENTS: [04] - RADIO.SchDoc		
ENGINEER: V.Nikolaenko	SIZE: A3	VARIANT: [No Variations]	REVISION: v1.0
APPROVED BY: [Not Approved]	DATE: 15.12.2021		SHEET: 4 of 7

AUDIO

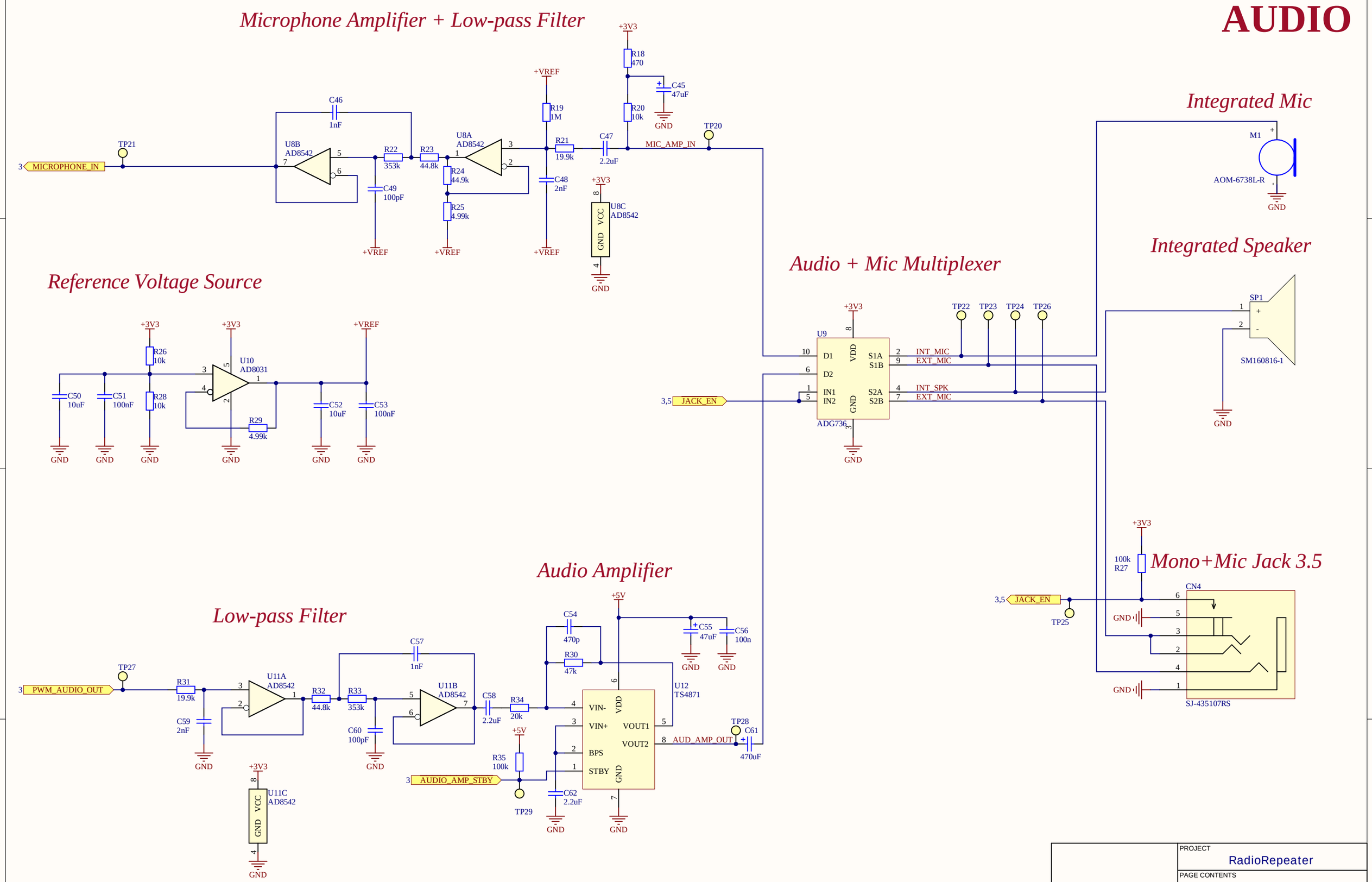

CONFIDENTAL. Do not distribute.	PROJECT: RadioRepeater		
	PAGE CONTENTS: [05] - AUDIO.SchDoc		
ENGINEER: V.Nikolaenko	SIZE: A3	VARIANT: [No Variations]	REVISION: v1.0
APPROVED BY: [Not Approved]	DATE: 15.12.2021		SHEET: 5 of 7

POWER

5V Source

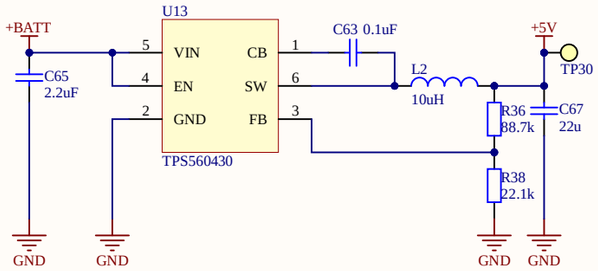

3.3V Source

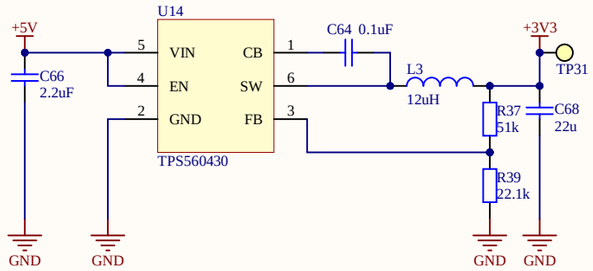

Battery Connector

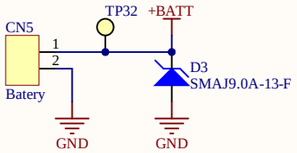

Mechanical

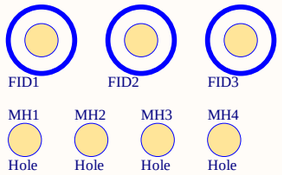

CONFIDENTAL. Do not distribute.	PROJECT RadioRepeater		
	PAGE CONTENTS [06] - POWER.SchDoc		
ENGINEER V.Nikolaenko	SIZE A3	VARIANT [No Variations]	REVISION v1.0
APPROVED BY [Not Approved]	DATE 15.12.2021		SHEET 6 of 7

DOC: REVISION HISTORY

v1.0 *Date: 08.12.2021*

Initial Document

CLOCKS (CPU & PCIE)

CONFIDENTAL. Do not distribute.	PROJECT RadioRepeater		
	PAGE CONTENTS [07] - DOC REVISION HISTORY.SchDoc		
ENGINEER V.Nikolaenko	SIZE A3	VARIANT [No Variations]	REVISION v1.0
APPROVED BY [Not Approved]	DATE 15.12.2021		SHEET 7 of 7

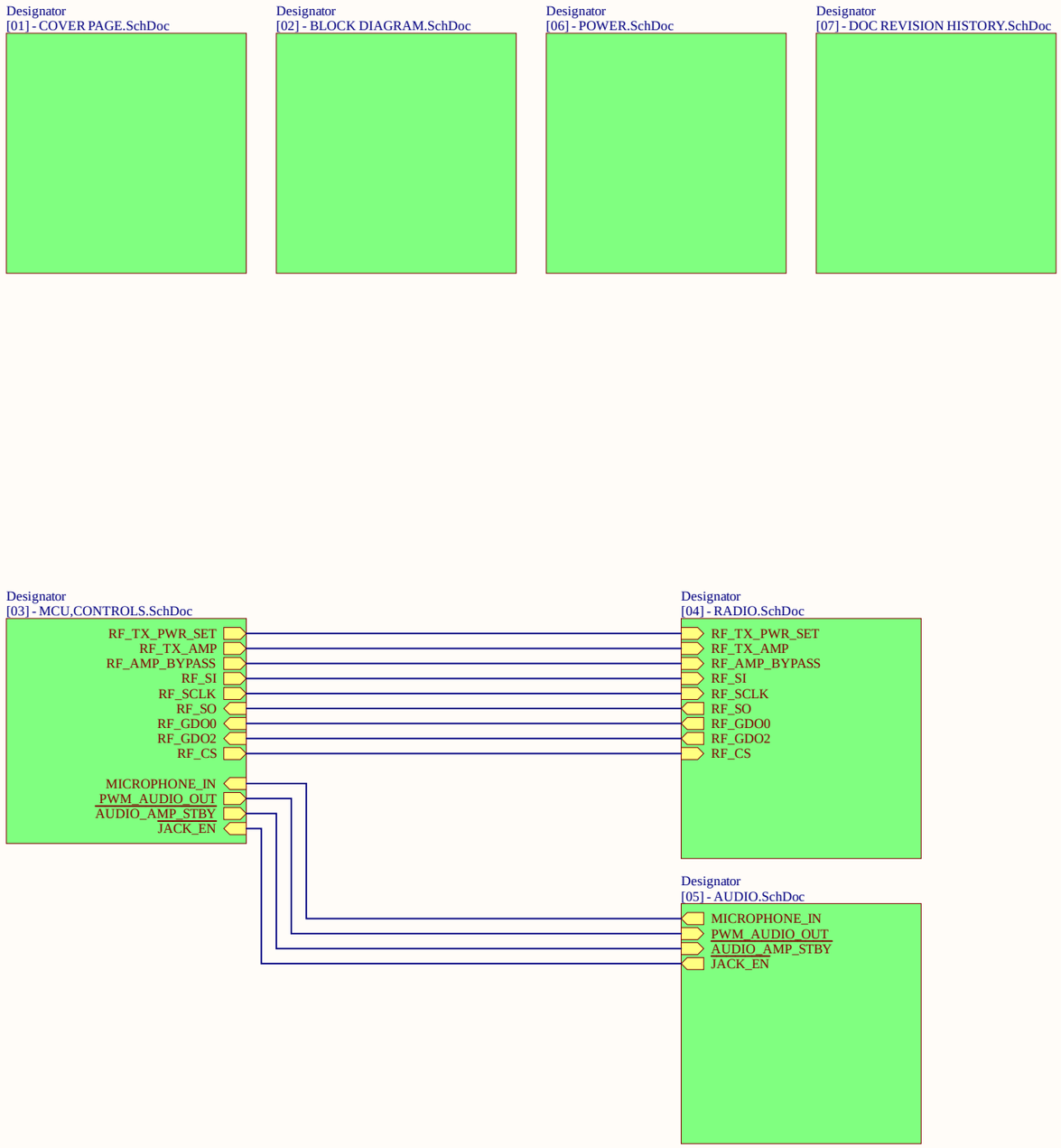

Cannot open file www.integrasources.com CONFIDENTAL. Do not distribute.	PROJECT RadioRepeater		
	PAGE CONTENTS RadioRepeater.SchDoc		
ENGINEER V.Nikolaenko	SIZE A3	VARIANT [No Variations]	REVISION v1.0
APPROVED BY [Not Approved]	DATE 15.12.2021		SHEET 8 of 8