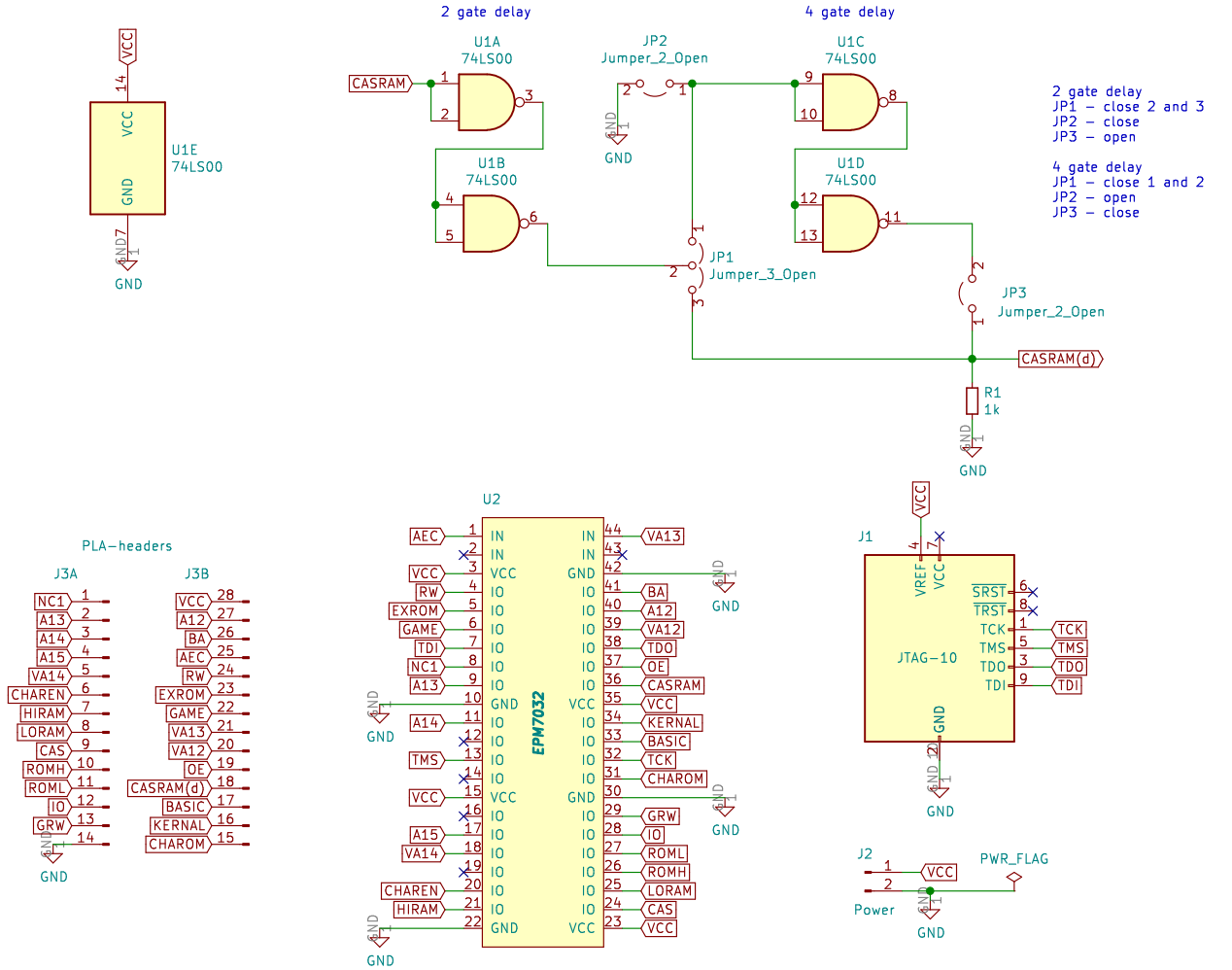

Update to Original with NAND gate delay.
https://github.com/marekl123/ezPLA-PCB

– updated by AdamT117 https://github.com/Kayto/

Sheet: /
File: ezPLAv2.0.sch

Title: ezPLA by ezContents (Marek)

Size: A4	Date: 2023-07-22	**Rev: v2.0**
KiCad E.D.A. kicad (5.1.9)-1		Id: 1/1