NOTES:

1. THE ISOLATOR AND DCCB NUMBERS SHALL BE PREFIXED WITH THE RECTIFIER STATION NUMBER UNLESS OTHERWISE STATED.
2. CABLE SIZES SCHEDULE FOR 11kV:
   185#3 = 185mm² 3/C CU
3. CABLE SIZES SCHEDULE FOR 400V:
   120# = 120mm² 4/C XLPE/SWA/LSOH CU
   150# = 150mm² 4/C PVC/SWA/PVC CU
   185# = 185mm² 4/C XLPE/SWA/LSOH CU
   240# = 240mm² 4/C XLPE/SWA/LSOH CU
   400# = 400mm² 4/C XLPE/SWA/LSOH CU
   4#240 = 4x240mm² 1/C XLPE/SWA/LSOH CU
   9#500 = 9x500mm² 1/C CU

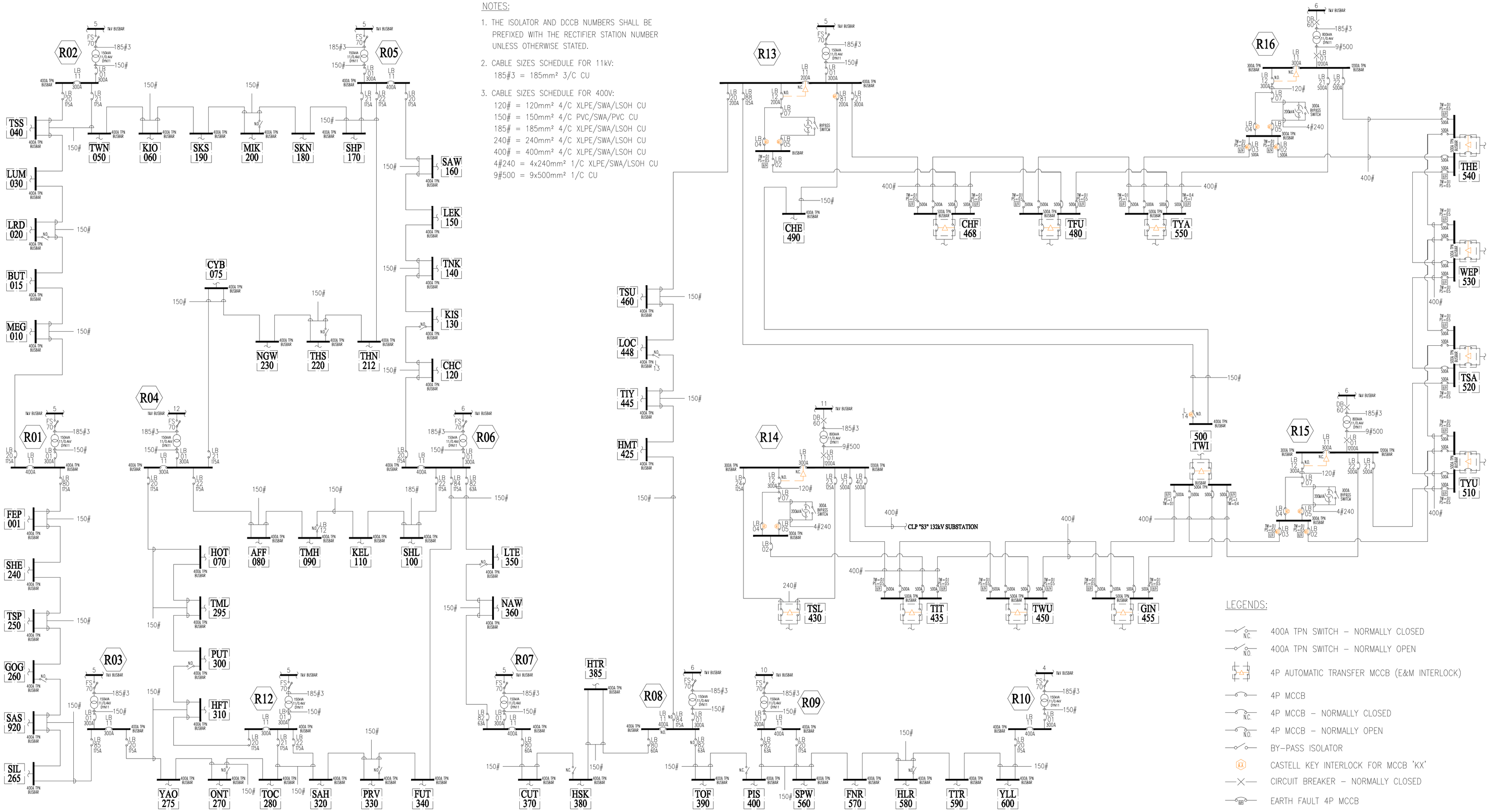

LEGENDS:

- 400A TPN SWITCH – NORMALLY CLOSED
- 400A TPN SWITCH – NORMALLY OPEN
- 4P AUTOMATIC TRANSFER MCCB (E&M INTERLOCK)
- 4P MCCB
- 4P MCCB – NORMALLY CLOSED
- 4P MCCB – NORMALLY OPEN
- BY-PASS ISOLATOR
- CASTELL KEY INTERLOCK FOR MCCB 'KX'
- CIRCUIT BREAKER – NORMALLY CLOSED
- EARTH FAULT 4P MCCB
- FUSE SWITCH
- XXX / YYY — PASSENGER STATION "XXX" STOP NUMBER 'YYY'
- RXX — RECTIFIER STATION NUMBER 'RXX'
- TPN BUSBAR
- TRANSFORMER
- VOLTAGE STABILIZER

REV	DESCRIPTION	BY	DATE	APPROVED
A	FIRST ISSUE	ANDY LO	11APR2011	PAUL LO

DRAWN	CS CHEUNG	DA-EE
DESIGNED	CS CHEUNG	DA-EE
CHECKED	ANDY LO	DE-EE
APPROVED	PAUL LO	EEM
DATE	11 APR 2011	

DO NOT SCALE DRAWINGS. ALL DIMENSIONS SHALL BE VERIFIED ON SITE. © MTR CORPORATION LIMITED 2008 COPYRIGHT IN RESPECT OF THIS DRAWING / DOCUMENT IS OWNED BY THE MTR CORPORATION LIMITED OF HONG KONG. NO REPRODUCTION OF THE DRAWING / DOCUMENT OR ANY PART BY WHATEVER MEANS IS PERMITTED WITHOUT THE PRIOR WRITTEN CONSENT OF THE MTR CORPORATION LIMITED.

MTR

ORIGINATOR
OPERATIONS DIVISION | TECHNICAL & ENGINEERING SERVICES DEPARTMENT

CADD REF. OD4_203_01404_0001_A.dwg

TITLE
SINGLE LINE DIAGRAM OF LOW VOLTAGE A.C. POWER SUPPLY SYSTEM FOR LRL

SCALE	DRAWING NO.	REV.
NTS	OD4/203/01404/0001	A

Filename: D:\ACP-AUTOCAD\OD4\TEMP\DRAWINGS\OD4-DWG\AUTOCAD_203_01404_0001_A.dwg
Date: 4/11/2011 8:53 Title Block: 0 Pen Table: Acad.ctb Plotted By: CSCHEUNG CS Cheung (DE&EEB) Plotter: DWG To PDF.pc3