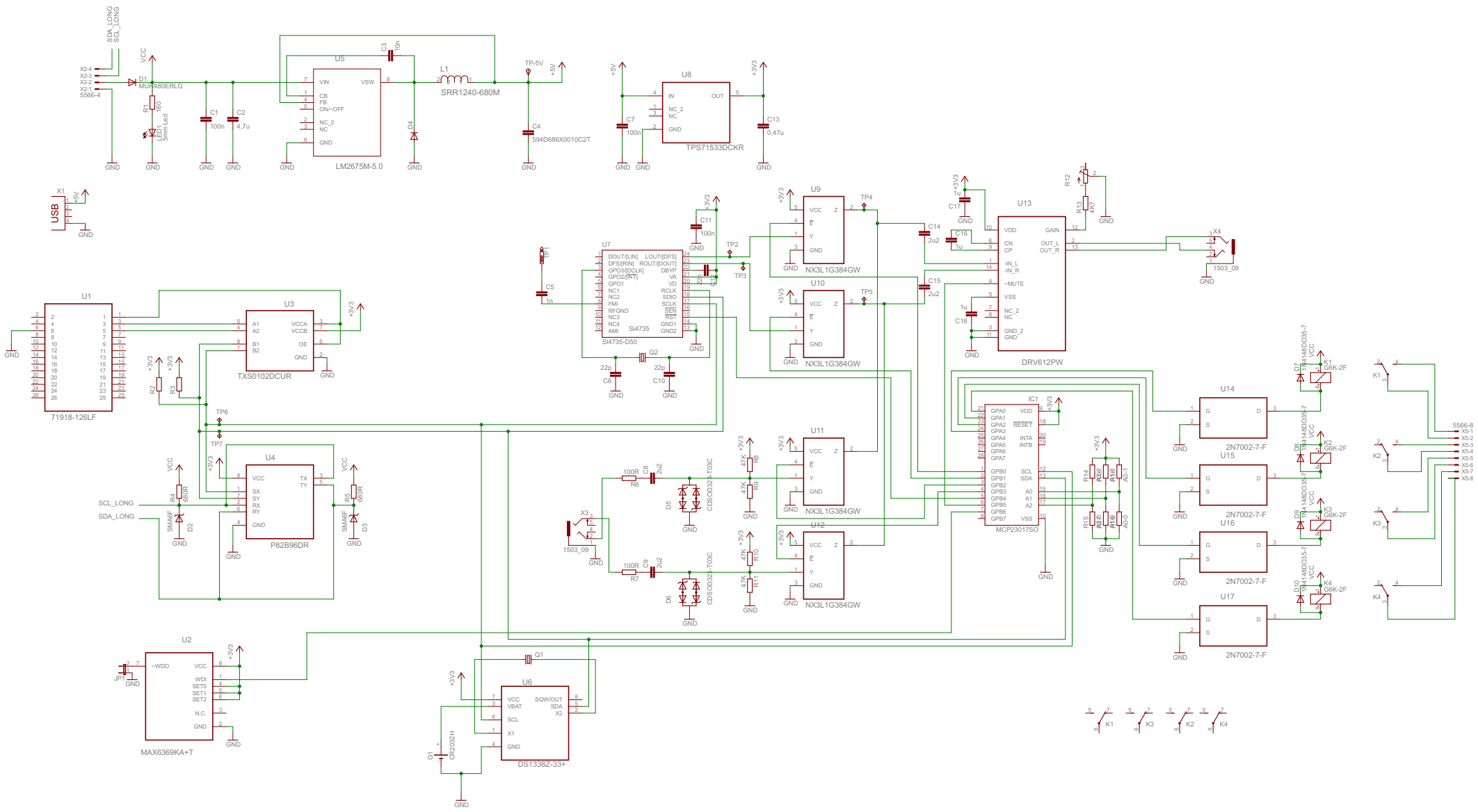

1/11/2013 22:19:11 f=0.50 D:\UserData\Koen\Documents\Wekker\svn\trunk\pcb\RGBClock\Mainboard.sch (Sheet: 1/1)