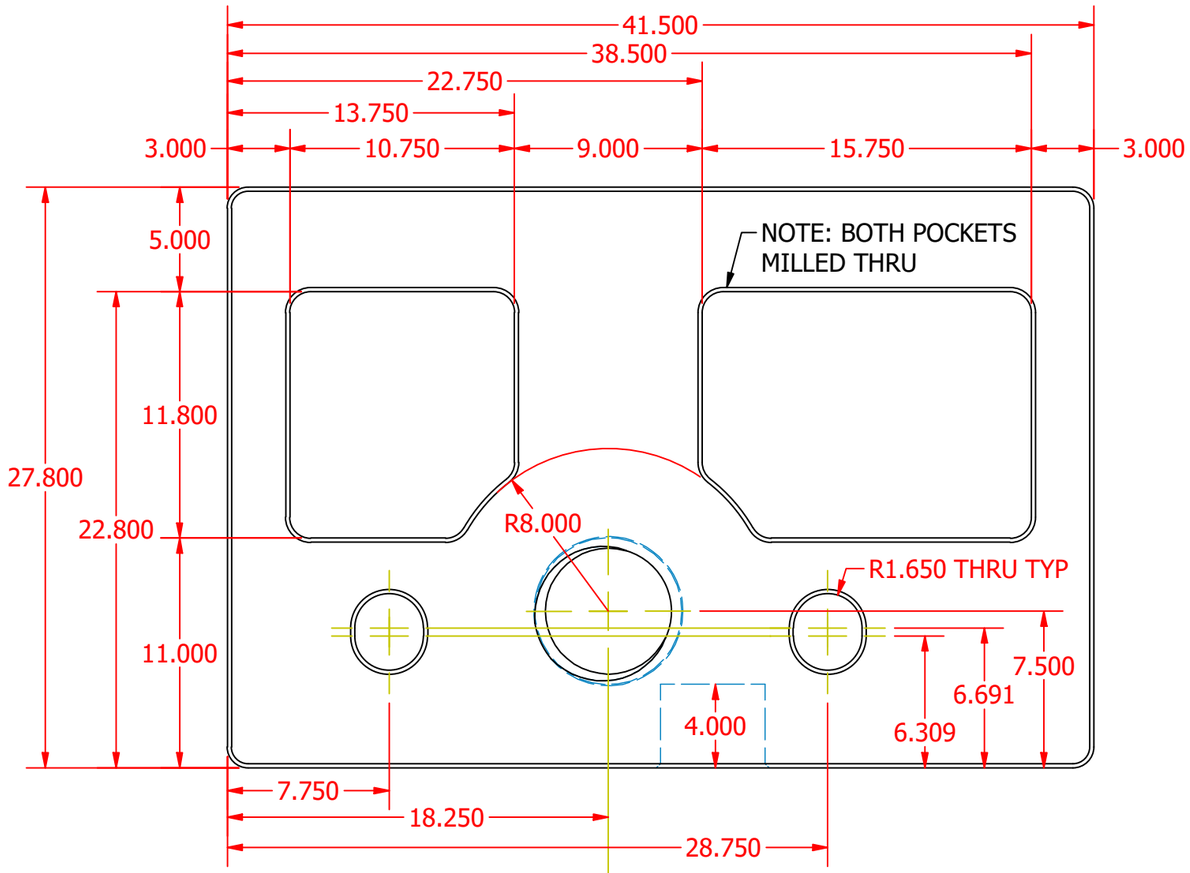

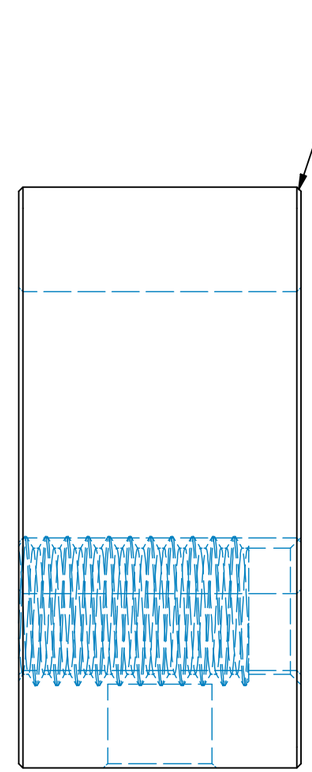

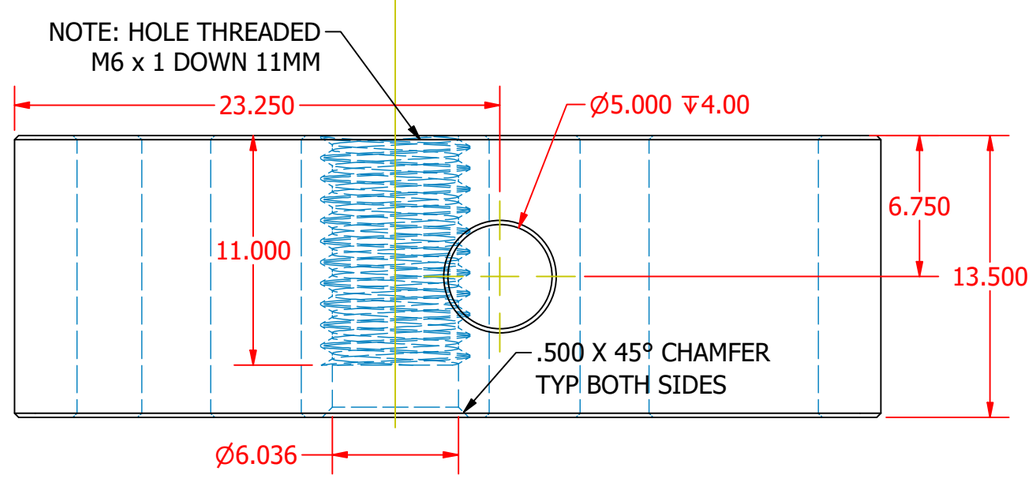

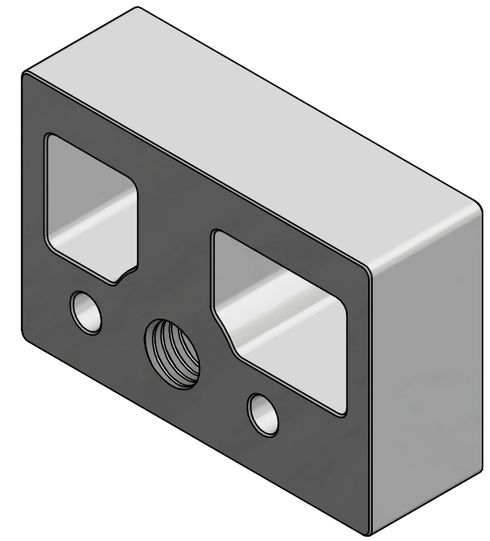

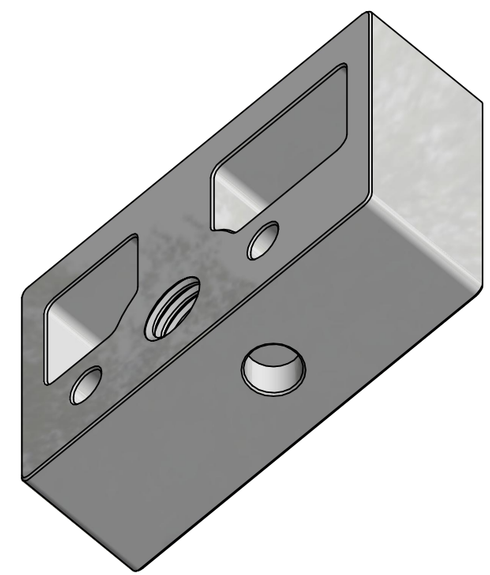

All Units are Metric unless otherwise noted

DRAWN	2/10/2021	
CHECKED	2/10/2021	
QA		
MFG		
APPROVED	2/10/2021	

TITLE

SIZE

DWG NO CNC_Toolcooler_Threaded_v2

REV

SCALE 3.5/1

SHEET 1 OF 1