Motor Driver

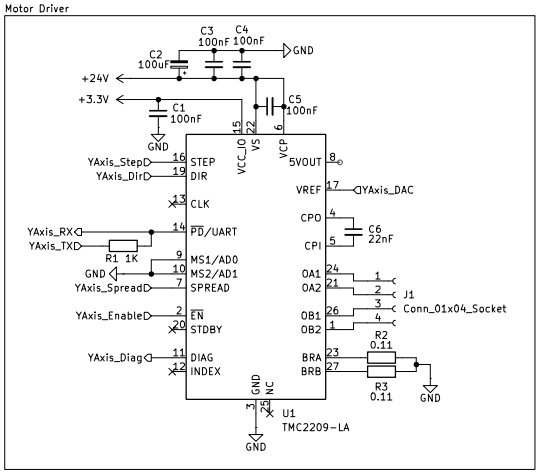

Power Regulation

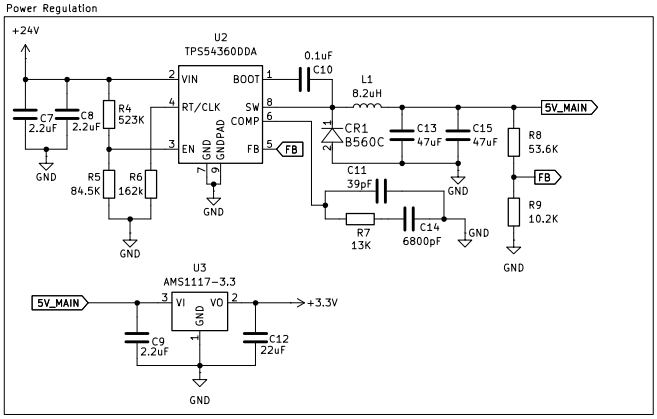

CAN BUS

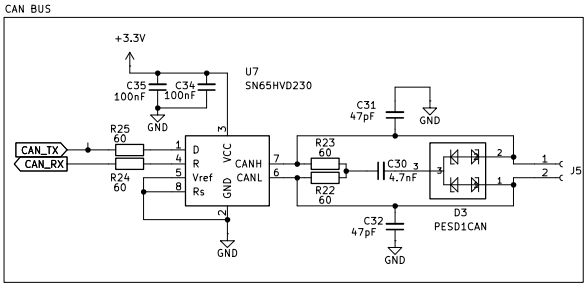

MCU

File: MCU.kicad_sch

Sheet: /		
File: Smart Motor.kicad_sch		
Title:		
Size: A4	Date:	**Rev:**
KiCad E.D.A. 9.0.2		Id: 1/2