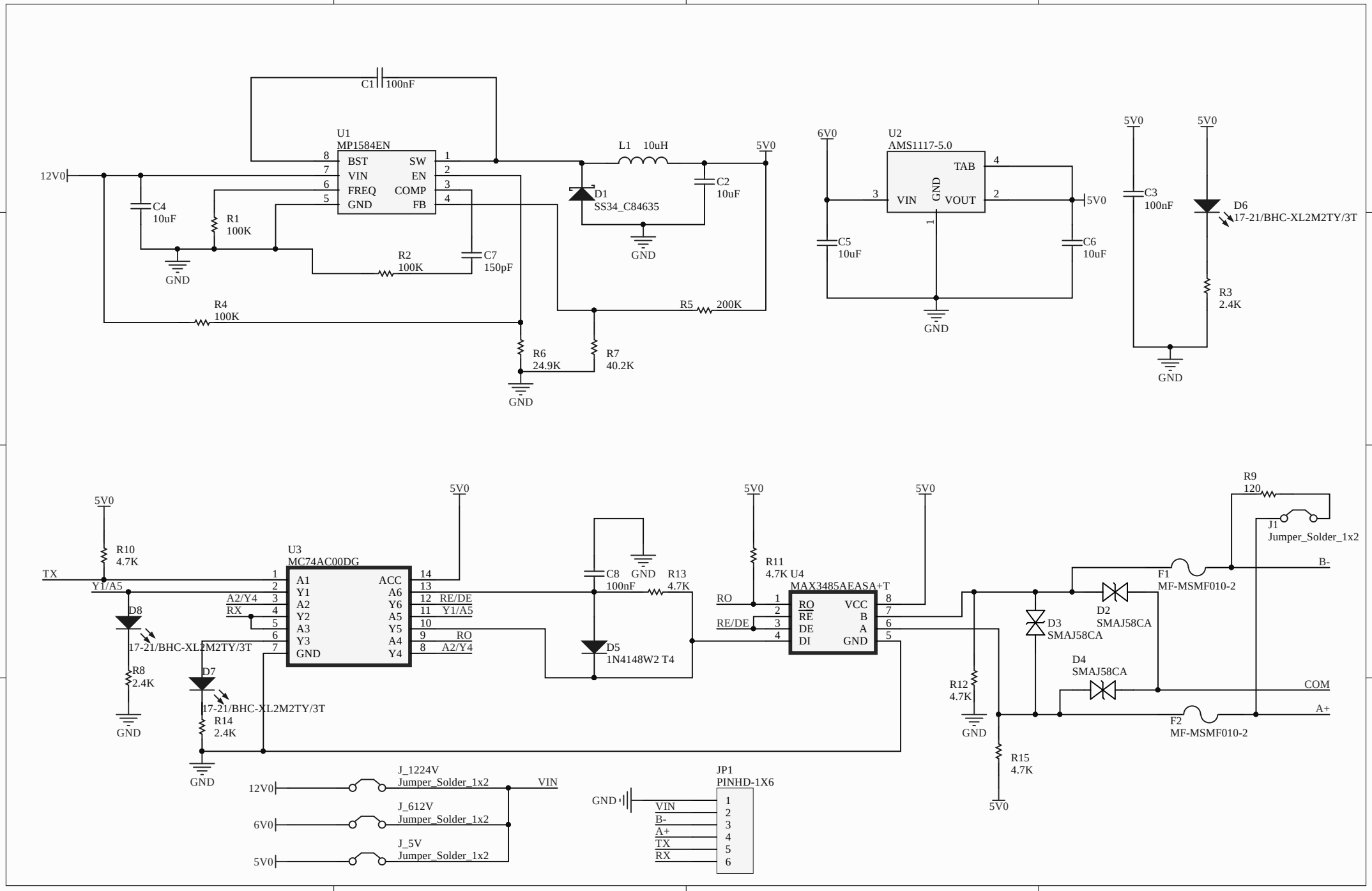
U1
MP1584EN
BST
VIN
FREQ
GND
SW
EN
COMP
FB
C1 100nF
12V0
C4 10uF
R1 100K
R2 100K
C7 150pF
R4 100K
L1 10uH
D1 SS34_C84635
C2 10uF
5V0
R5 200K
R6 24.9K
R7 40.2K
GND
6V0
U2
AMS1117-5.0
TAB
VIN
GND
VOUT
C5 10uF
C6 10uF
C3 100nF
D6 17-21/BHC-XL2M2TY/3T
R3 2.4K
R10 4.7K
TX
Y1/A5
D8 17-21/BHC-XL2M2TY/3T
R8 2.4K
U3
MC74AC00DG
A1
Y1
A2
Y2
A3
Y3
GND
ACC
A6
Y6
A5
Y5
A4
Y4
A2/Y4
RX
RE/DE
RO
D7 17-21/BHC-XL2M2TY/3T
R14 2.4K
C8 100nF
R13 4.7K
D5 1N4148W2 T4
R11 4.7K
U4
MAX3485AEASA+T
RE
DE
DI
VCC
B
A
R12 4.7K
R15 4.7K
R9 120
J1 Jumper_Solder_1x2
B-
F1 MF-MSMF010-2
D2 SMAJ58CA
D3 SMAJ58CA
D4 SMAJ58CA
COM
A+
F2 MF-MSMF010-2
J_1224V Jumper_Solder_1x2
J_612V Jumper_Solder_1x2
J_5V Jumper_Solder_1x2
VIN
JP1
PINHD-1X6

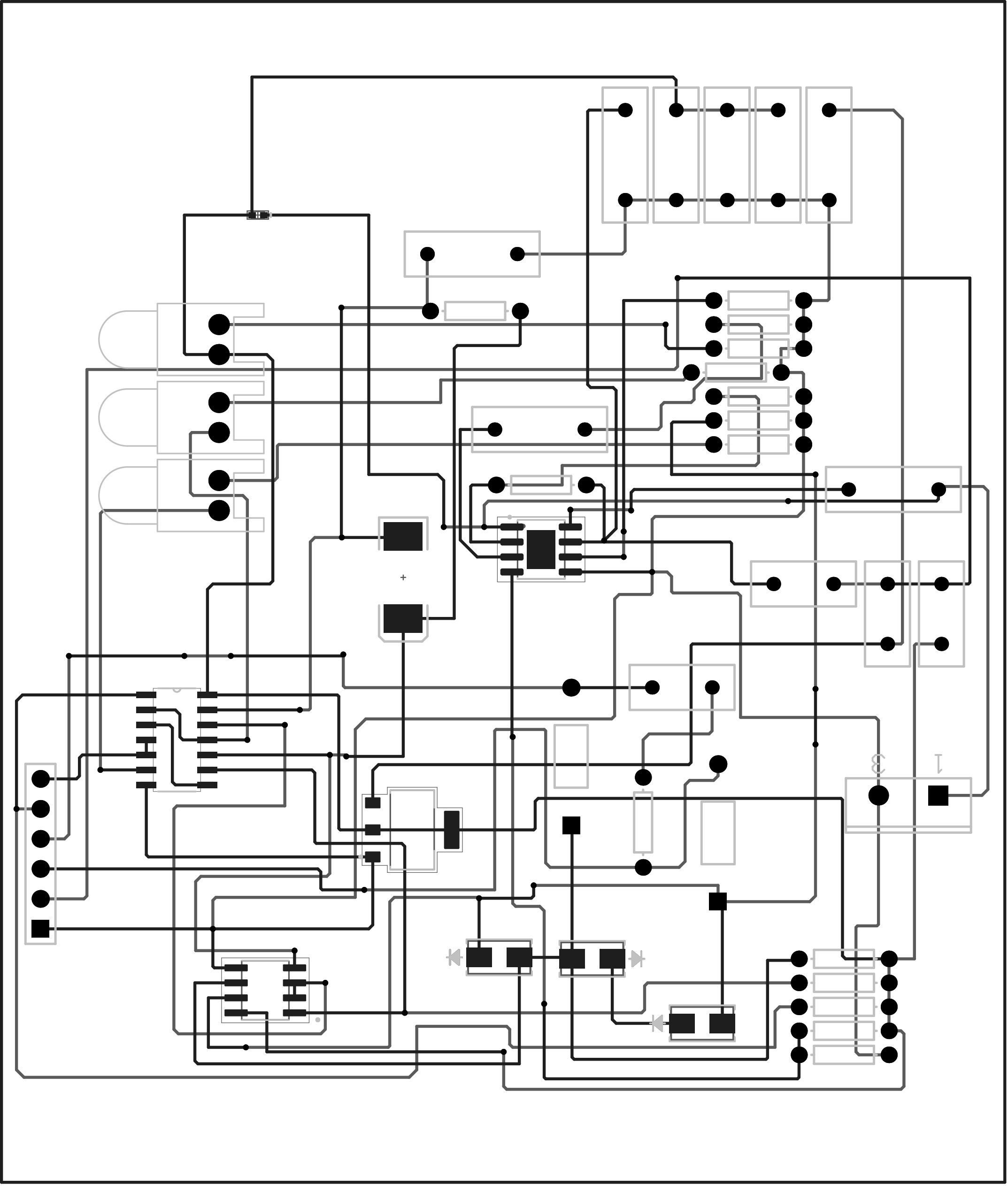

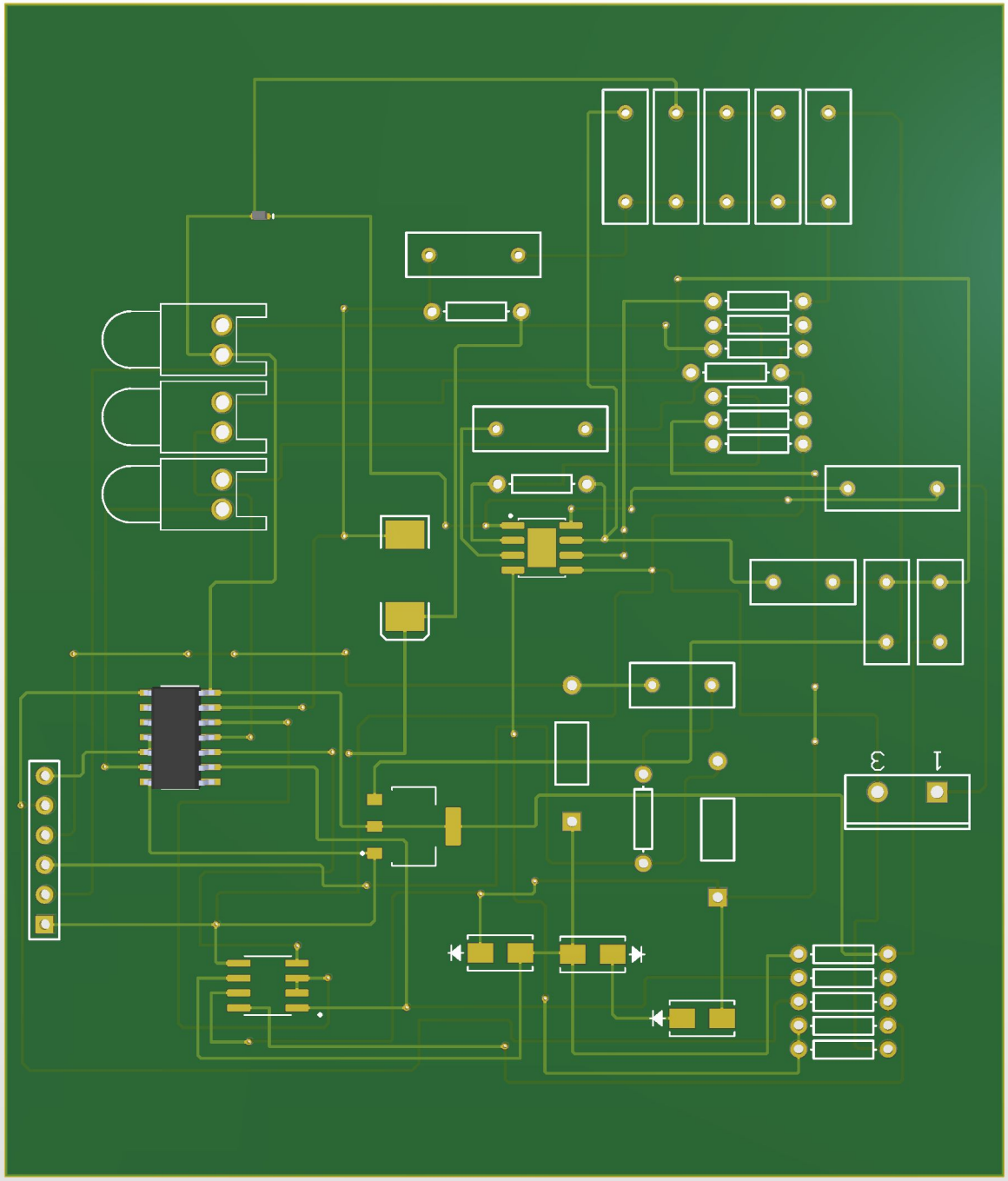
1
3