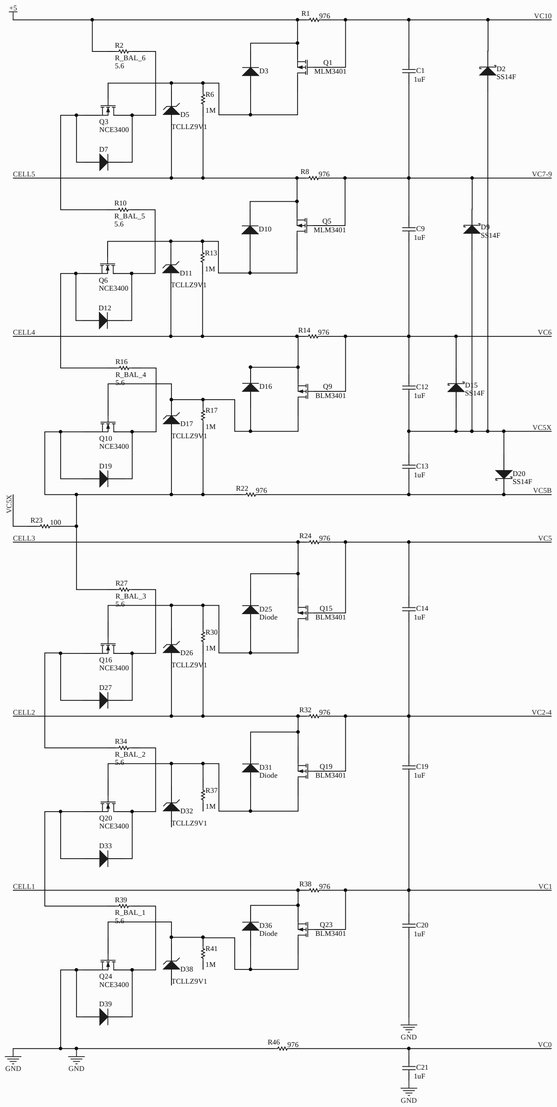

Analog Input Filters & External Balancing

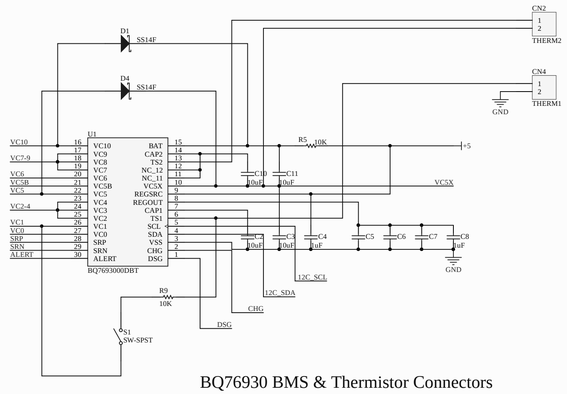

BQ76930 BMS & Thermistor Connectors

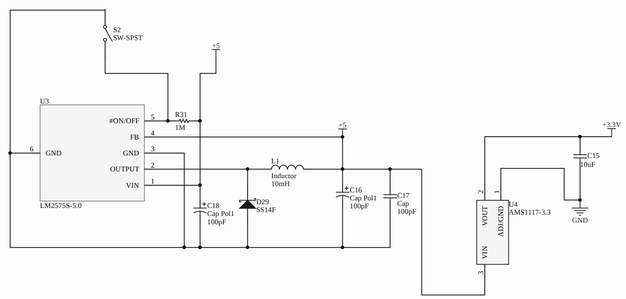

5V Buck Step-Down & 3.3V Linear Regulator

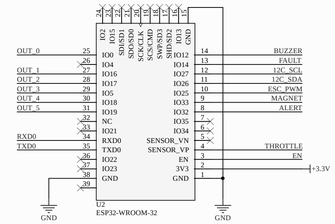

ESP32-WROOM-32

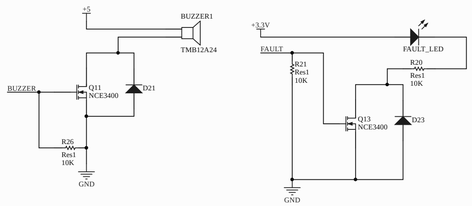

Fault Buzzer & LED

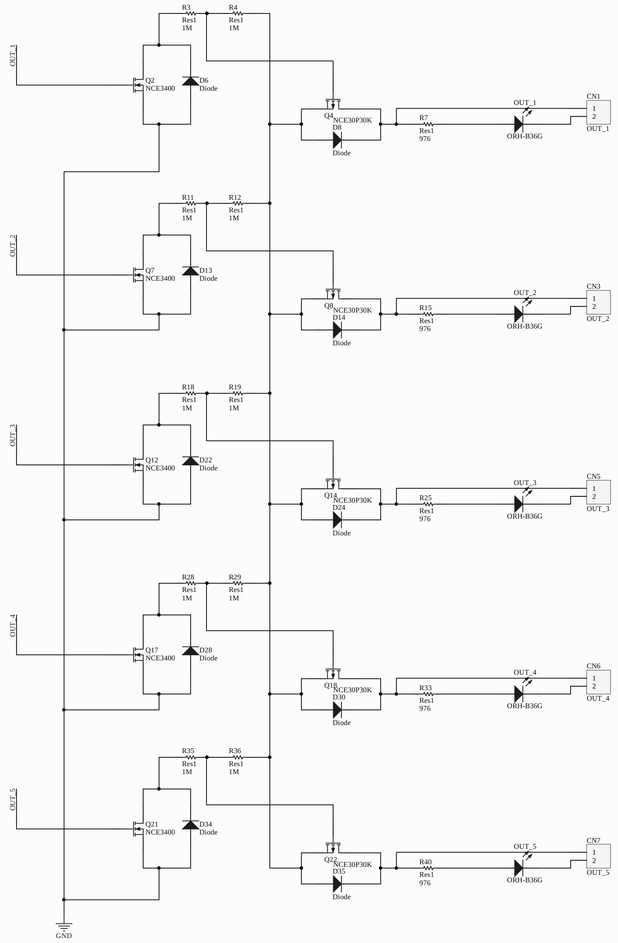

Low-Power Outputs (10A)

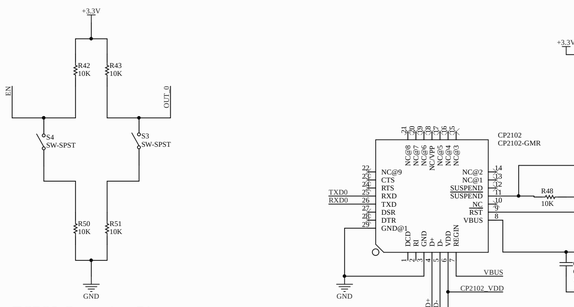

ESP32 Strapping Pins

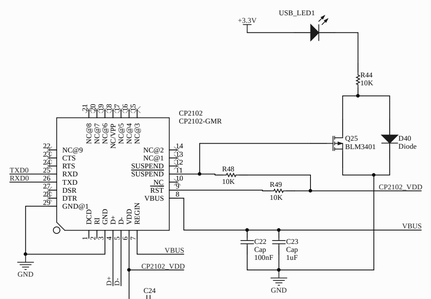

CP2102 USB UART Serial Port

(bus-powered, no auto-program)

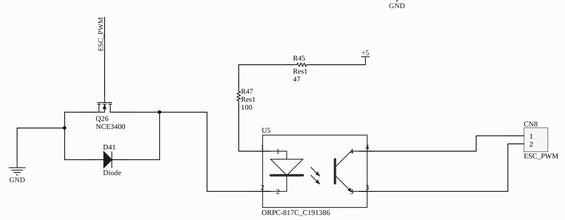

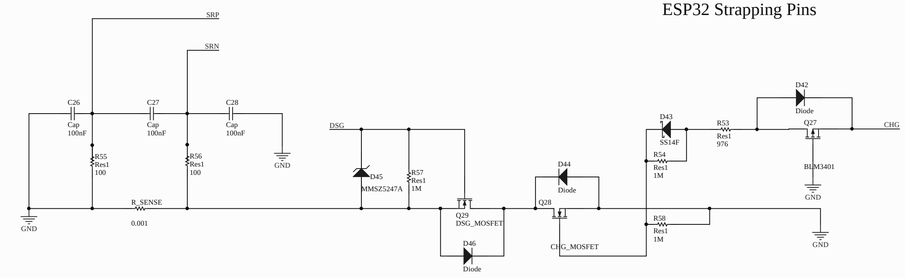

Current Sense Resistor & Protection MOSFETs

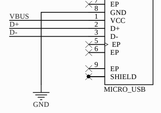
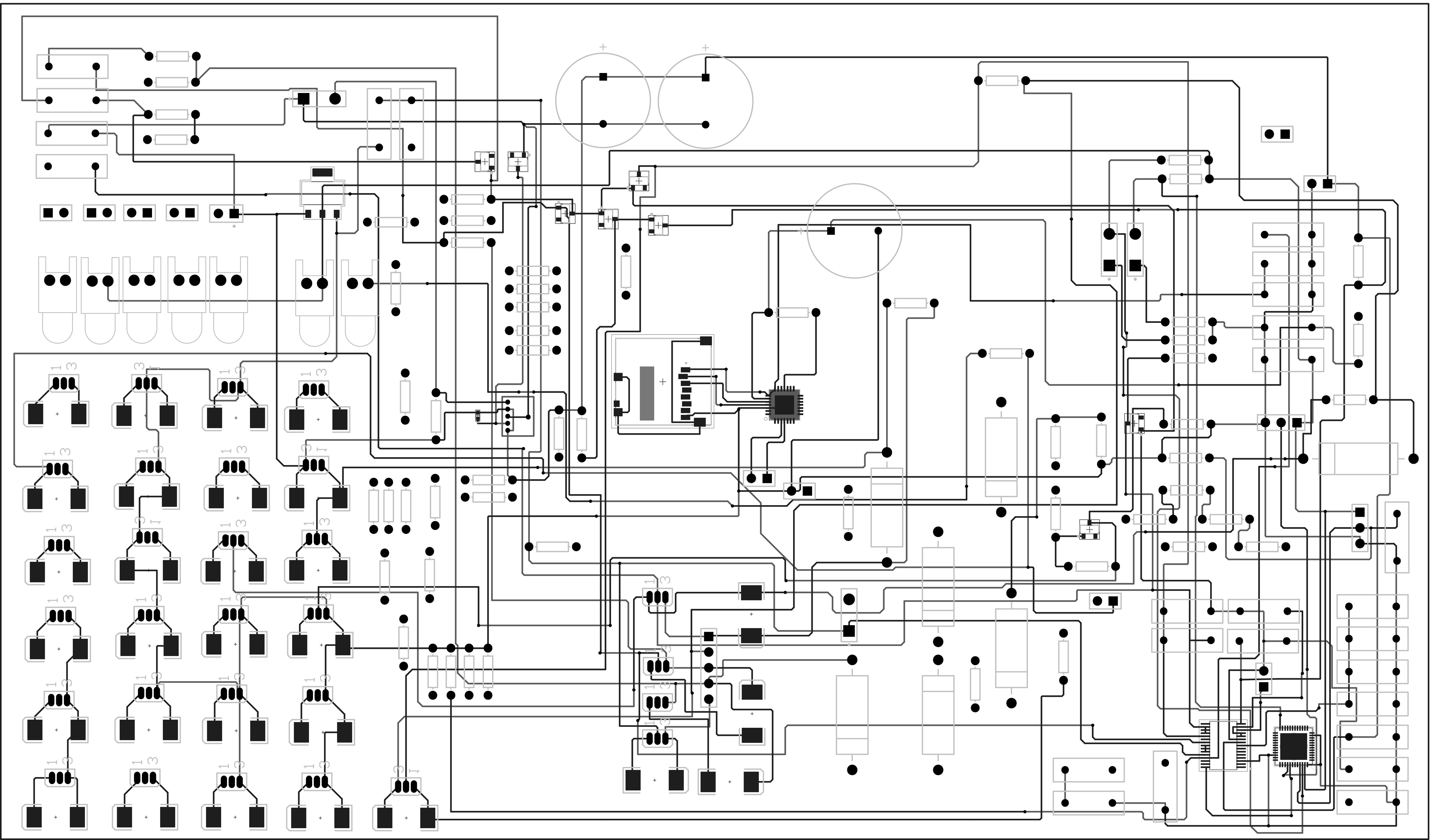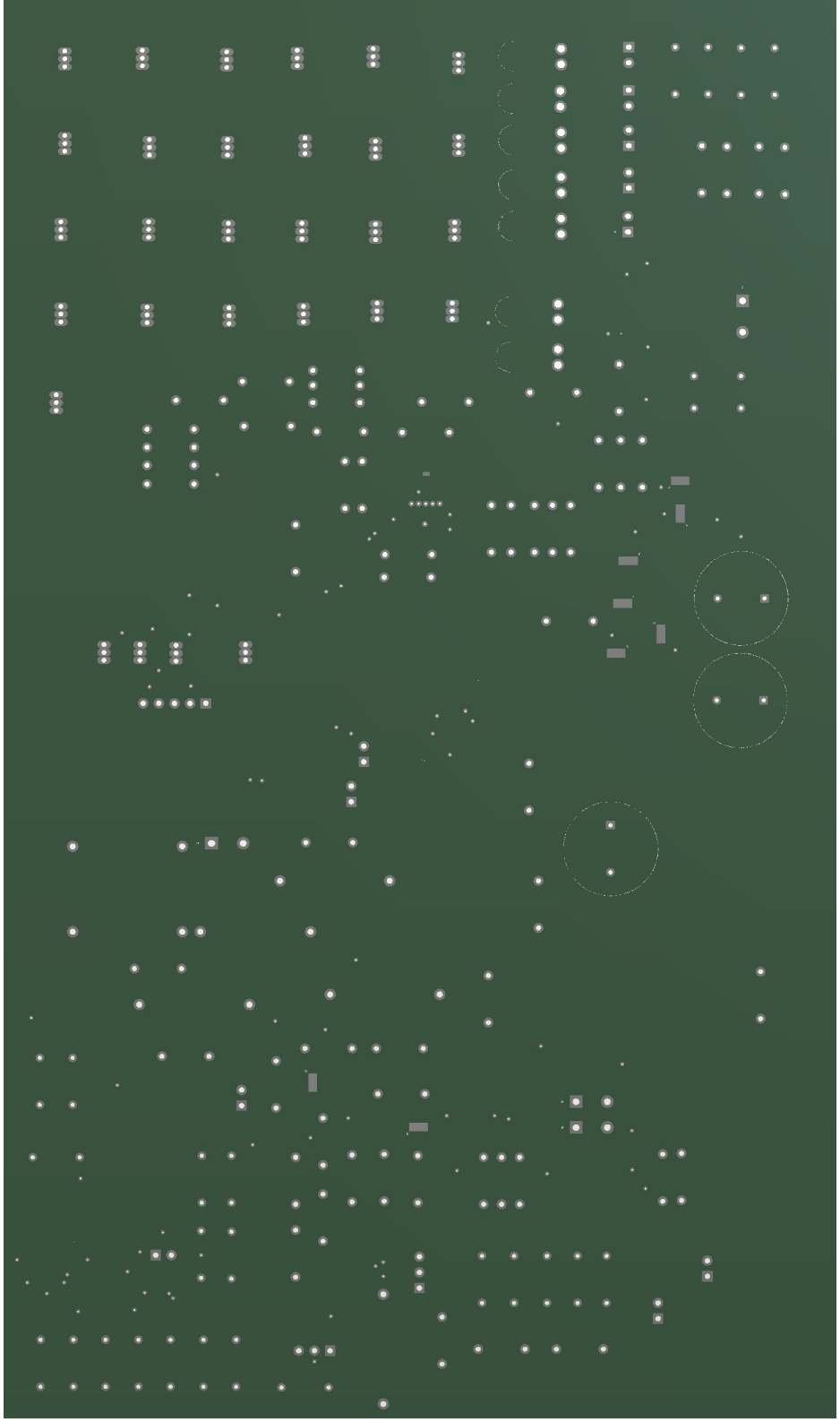
Connectors