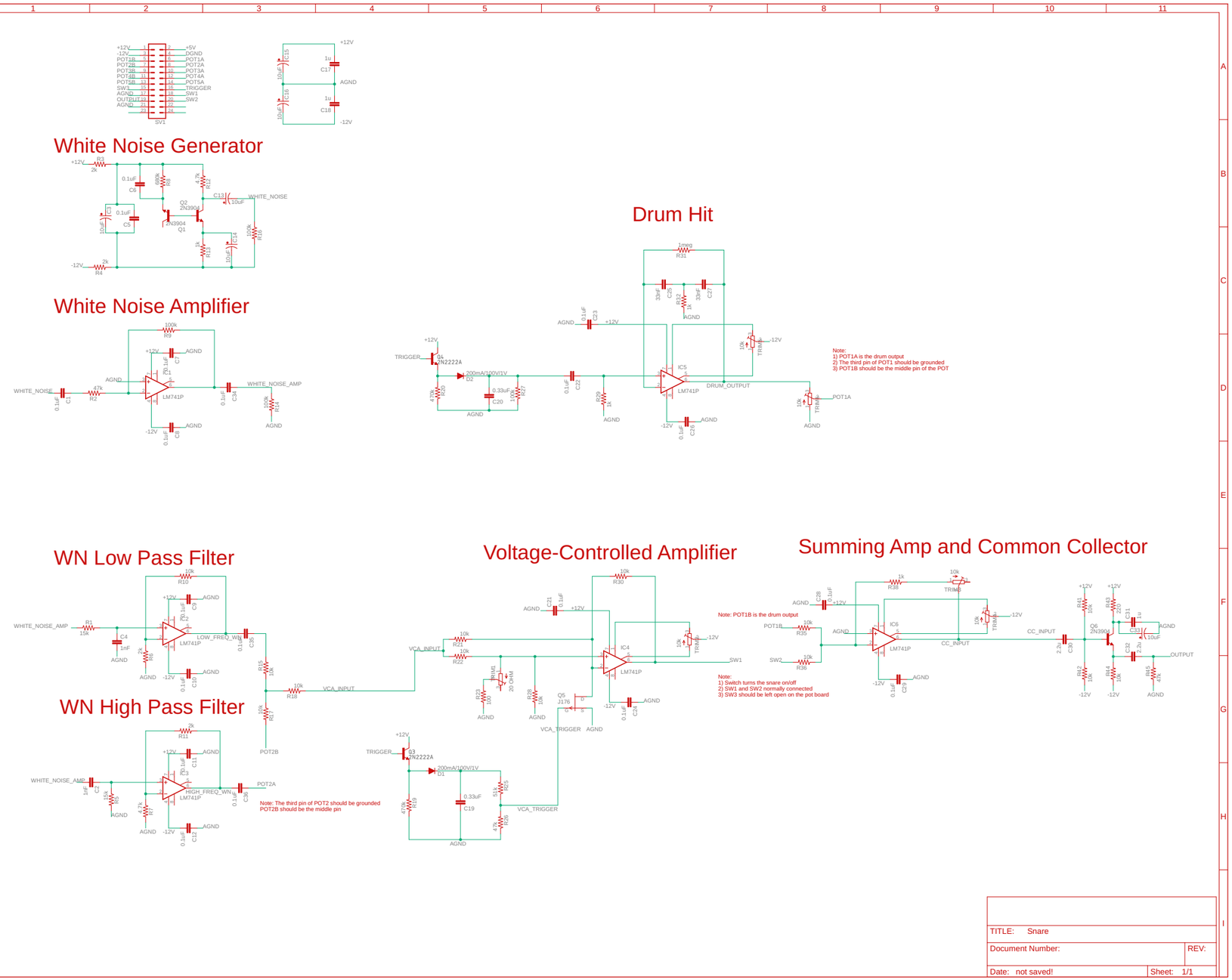
White Noise Generator
White Noise Amplifier
Drum Hit
WN Low Pass Filter
WN High Pass Filter
Voltage-Controlled Amplifier
Summing Amp and Common Collector
Note:
1) POT1A is the drum output
2) The third pin of POT1 should be grounded
3) POT1B should be the middle pin of the POT
Note: POT1B is the drum output
Note:
1) Switch turns the snare on/off
2) SW1 and SW2 normally connected
3) SW3 should be left open on the pot board
Note: The third pin of POT2 should be grounded
POT2B should be the middle pin
TITLE: Snare
Document Number:
REV:
Date: not saved!
Sheet: 1/1