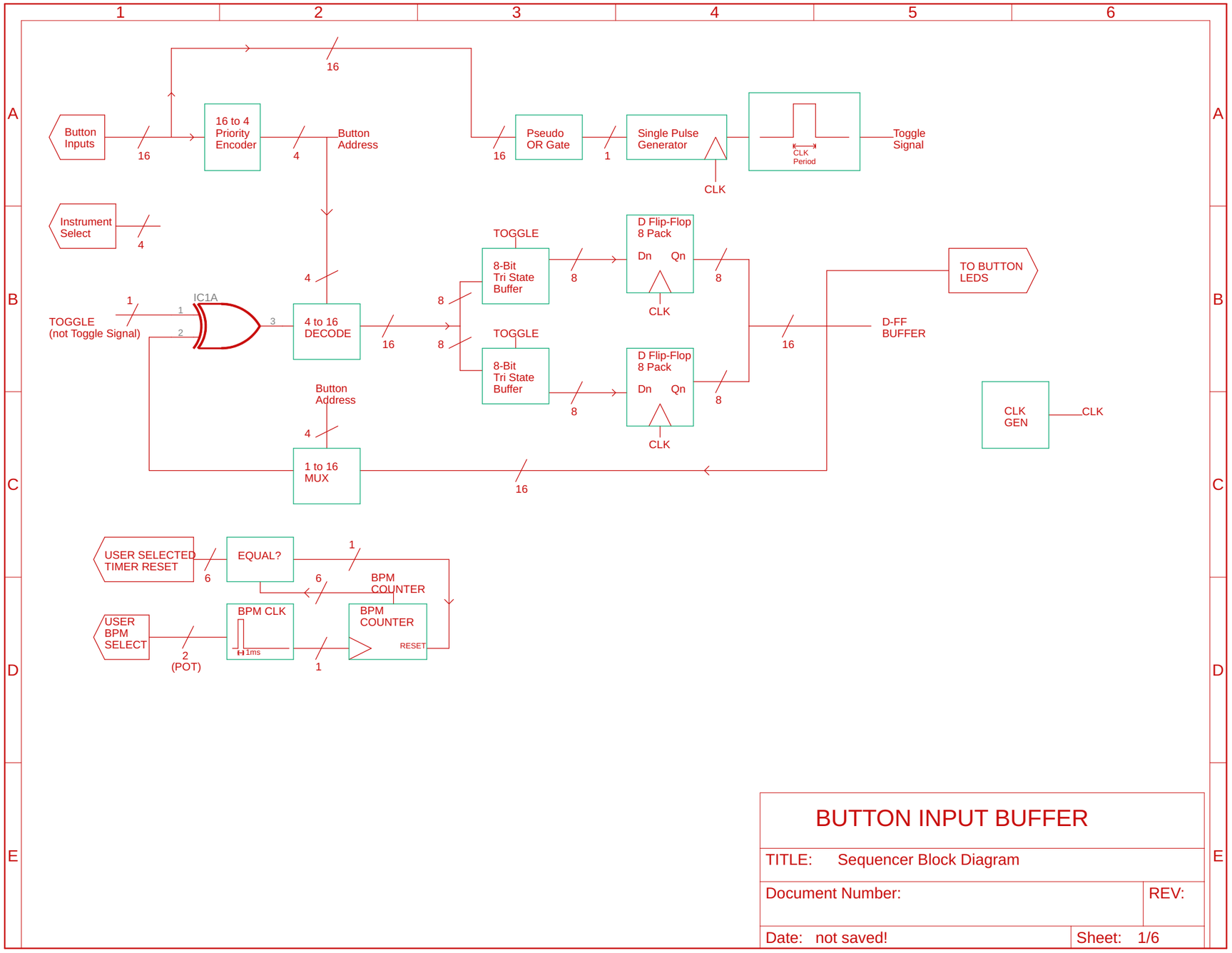

BUTTON INPUT BUFFER

TITLE: Sequencer Block Diagram	
Document Number:	REV:
Date: not saved!	Sheet: 1/6

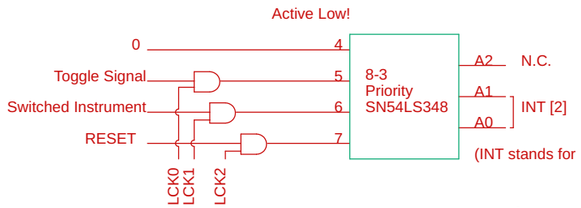

(INT stands for INTERRUPT)

INPUT	A1	A0
DEFAULT	1	1
Toggle Sig	1	0
Swch Inst.	0	1
RESET	0	0

Top Level State Diagram

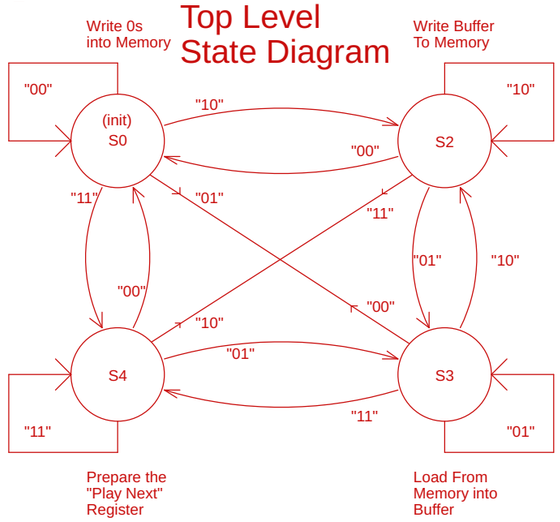

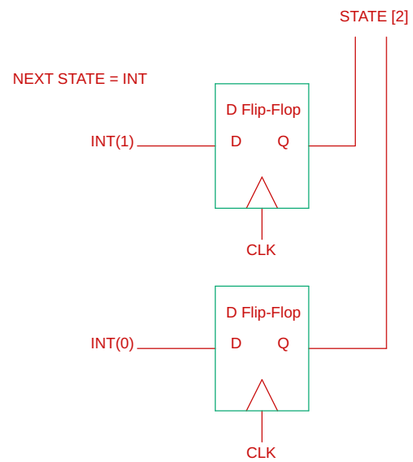

TITLE: Sequencer Block Diagram	
Document Number:	REV:
Date: not saved!	Sheet: 2/6

Write Zeros to RAM
State Diagram

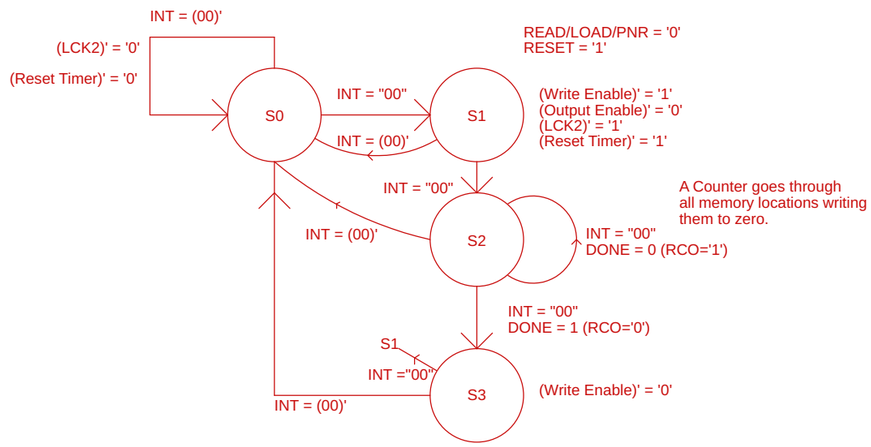

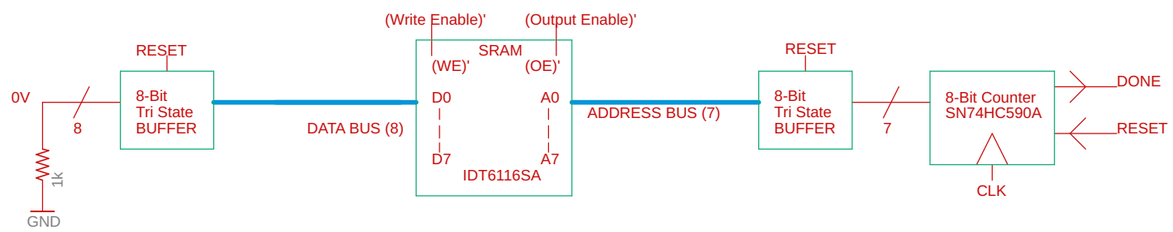

TITLE: Sequencer Block Diagram	
Document Number:	REV:
Date: not saved!	Sheet: 3/6

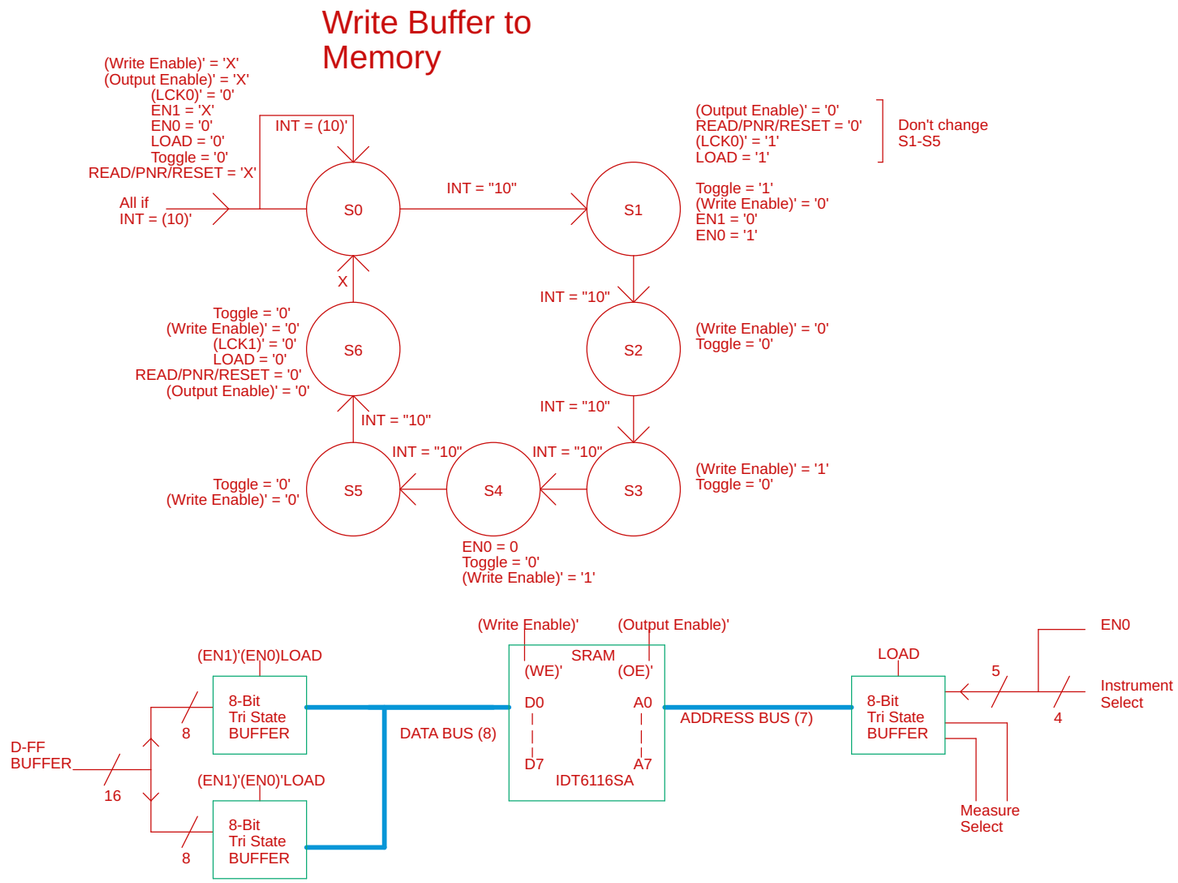

TITLE: Sequencer Block Diagram	
Document Number:	REV:
Date: not saved!	Sheet: 4/6

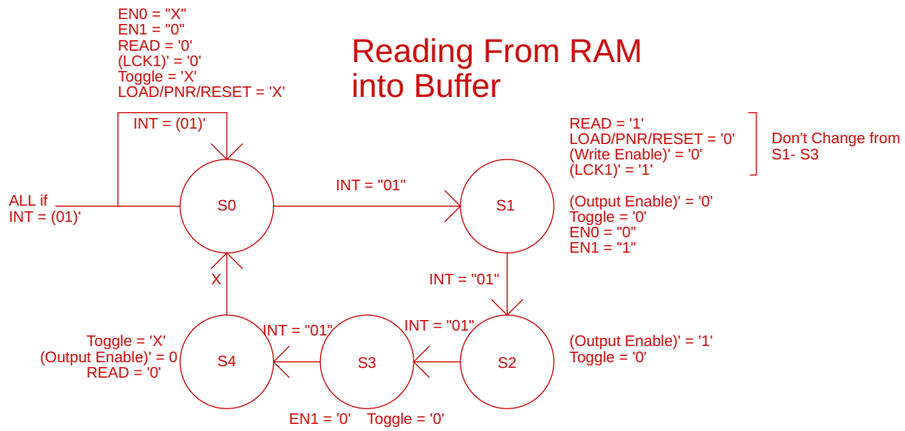

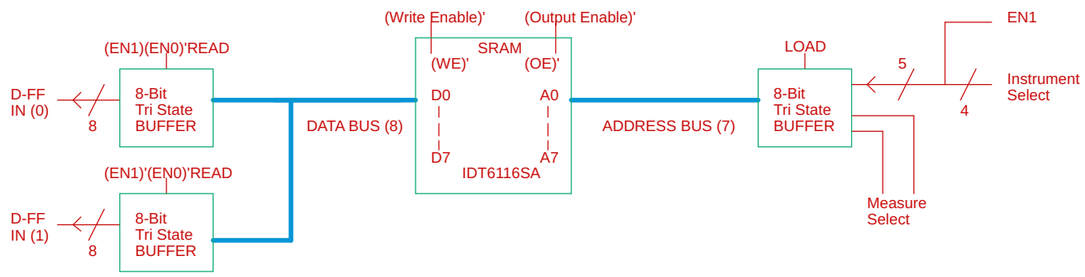

TITLE: Sequencer Block Diagram	
Document Number:	REV:
Date: not saved!	Sheet: 5/6

Load "Play - Next" Register

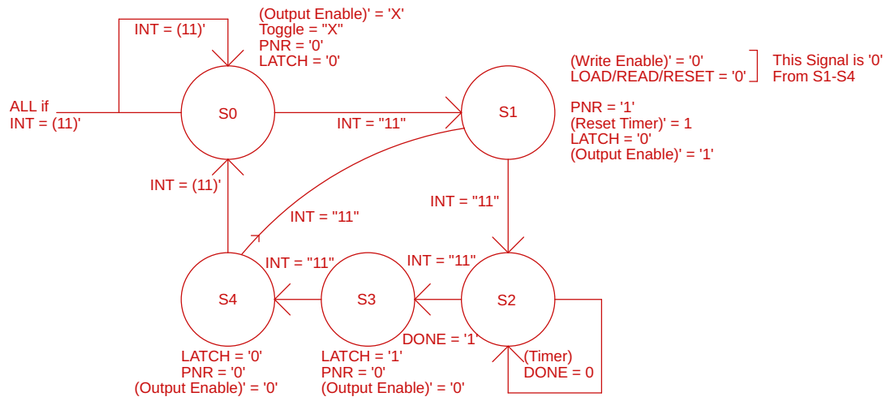

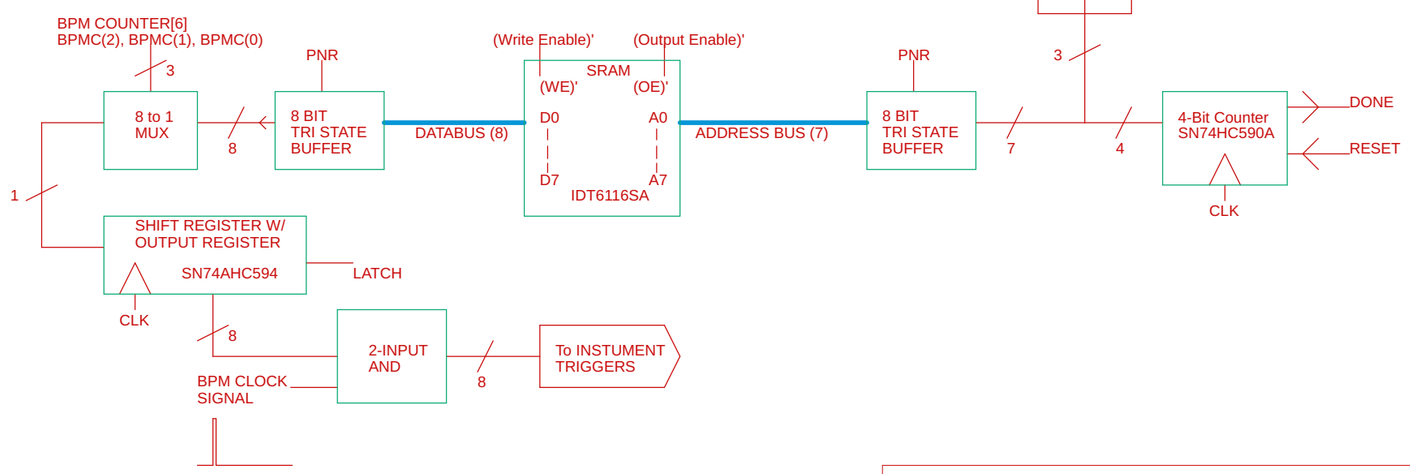

TITLE: Sequencer Block Diagram	
Document Number:	REV:
Date: not saved!	Sheet: 6/6