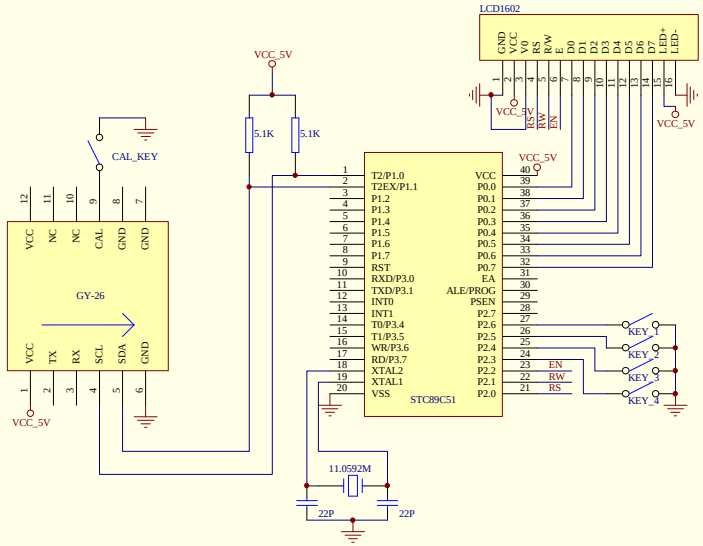

Title		
Size B	Number	Revision
Date: 20-Jan-2011	Sheet of	
File: D:\广运电子保存项目\磁场模块GH-26不同方案\磁场模块电路图\BACKUP~2.DDB	Drawn by:	