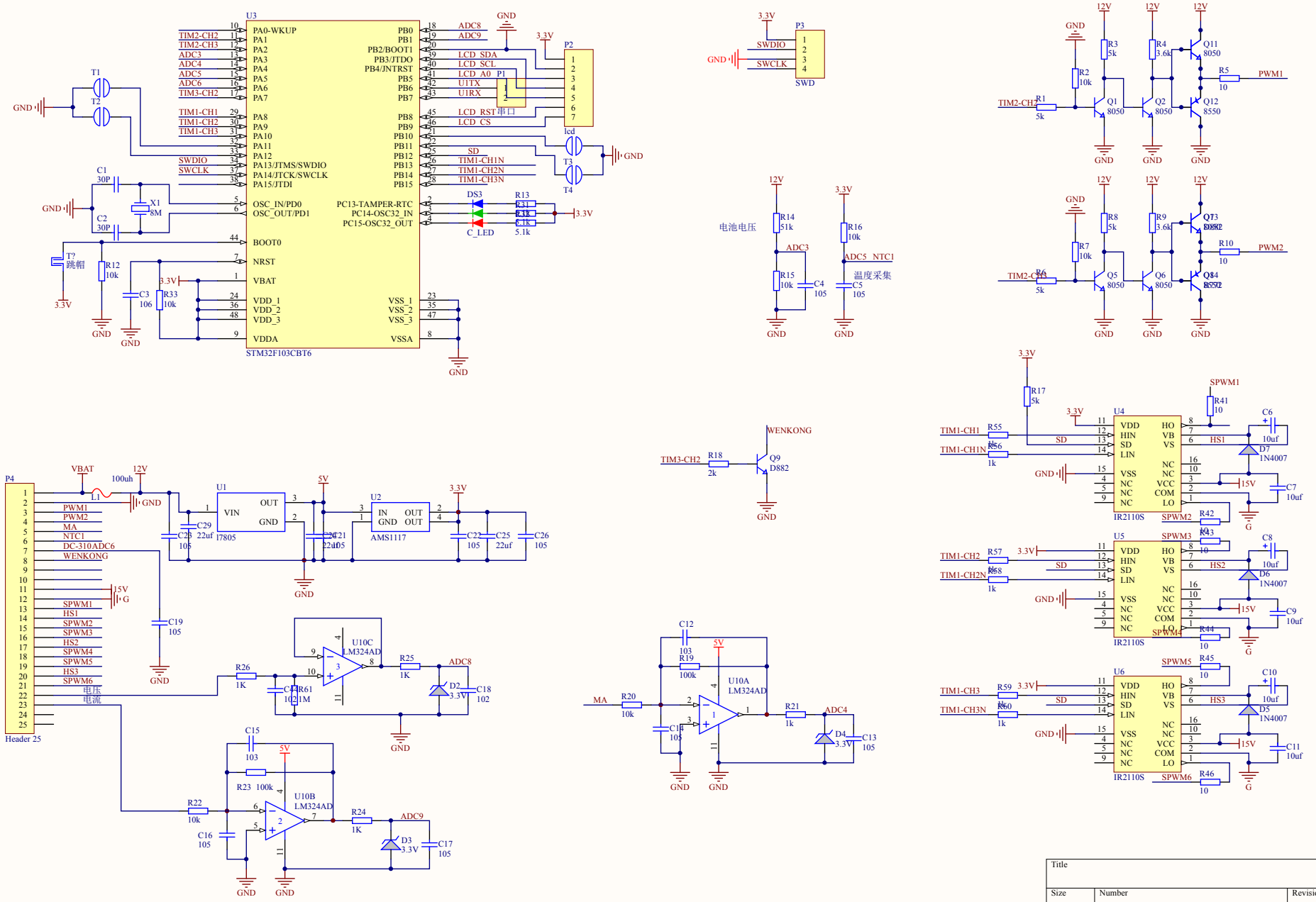

Title		
Size A3	Number	Revision
Date: 2013/8/8		Sheet of
File: E:\350W逆变器\逆变控制板.SchDoc		Drawn By: