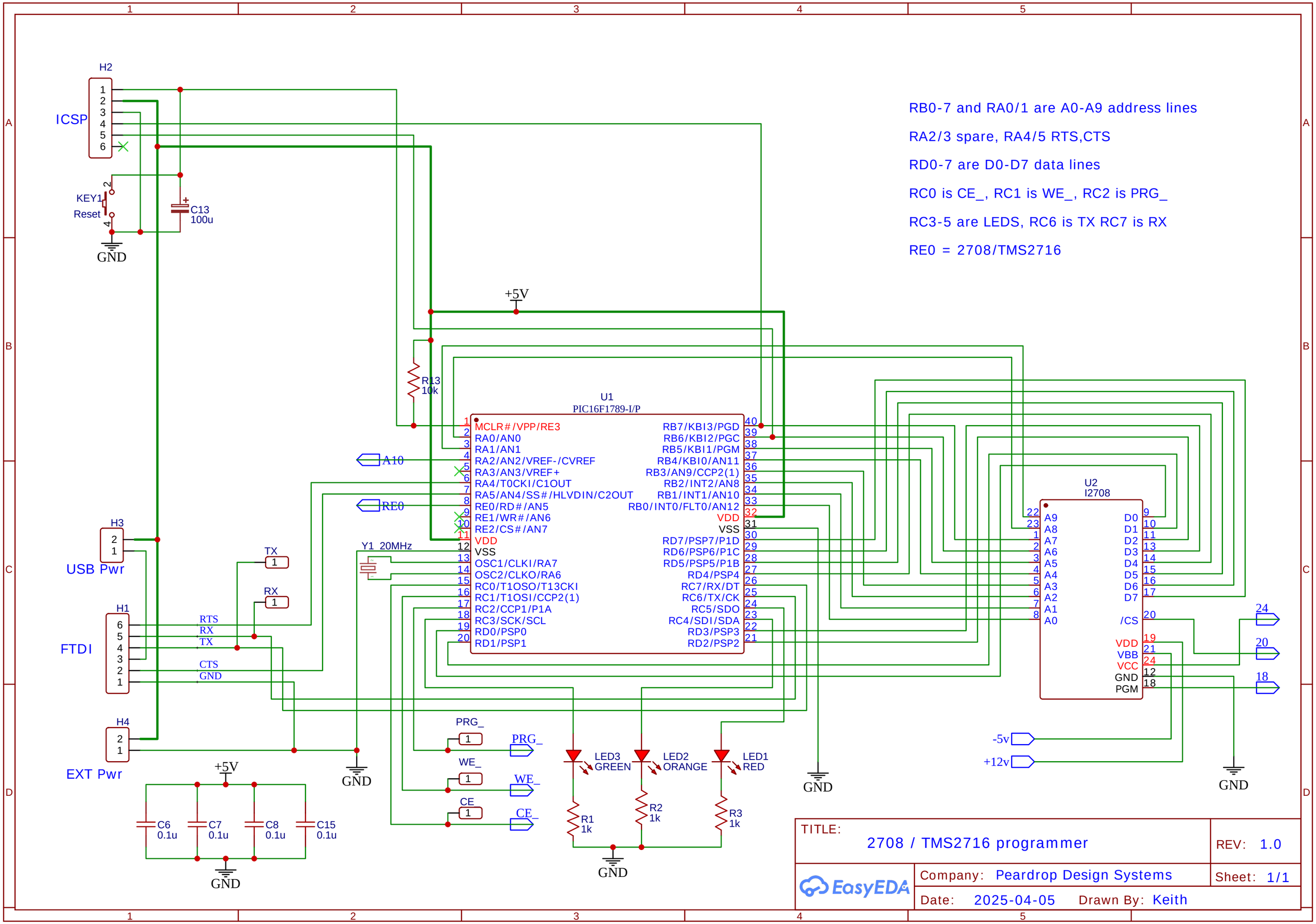
RB0-7 and RA0/1 are A0-A9 address lines
RA2/3 spare, RA4/5 RTS,CTS
RD0-7 are D0-D7 data lines
RC0 is CE_, RC1 is WE_, RC2 is PRG_
RC3-5 are LEDS, RC6 is TX RC7 is RX
RE0 = 2708/TMS2716
H2
ICSP
KEY1
Reset
C13
100u
GND
+5V
R13
10k
U1
PIC16F1789-I/P
MCLR#/VPP/RE3
RA0/AN0
RA1/AN1
RA2/AN2/VREF-/CVREF
RA3/AN3/VREF+
RA4/T0CKI/C1OUT
RA5/AN4/SS#/HLVDIN/C2OUT
RE0/RD#/AN5
RE1/WR#/AN6
RE2/CS#/AN7
VDD
VSS
OSC1/CLKI/RA7
OSC2/CLKO/RA6
RC0/T1OSO/T13CKI
RC1/T1OSI/CCP2(1)
RC2/CCP1/P1A
RC3/SCK/SCL
RD0/PSP0
RD1/PSP1
RB7/KBI3/PGD
RB6/KBI2/PGC
RB5/KBI1/PGM
RB4/KBI0/AN11
RB3/AN9/CCP2(1)
RB2/INT2/AN8
RB1/INT1/AN10
RB0/INT0/FLT0/AN12
VDD
VSS
RD7/PSP7/P1D
RD6/PSP6/P1C
RD5/PSP5/P1B
RD4/PSP4
RC7/RX/DT
RC6/TX/CK
RC5/SDO
RC4/SDI/SDA
RD3/PSP3
RD2/PSP2
A10
RE0
Y1 20MHz
H3
USB Pwr
H1
FTDI
RTS
RX
TX
CTS
GND
H4
EXT Pwr
TX
RX
PRG_
WE_
CE
LED3
GREEN
LED2
ORANGE
LED1
RED
R1
1k
R2
1k
R3
1k
C6
0.1u
C7
0.1u
C8
0.1u
C15
0.1u
U2
I2708
A9
A8
A7
A6
A5
A4
A3
A2
A1
A0
/CS
VDD
VBB
VCC
GND
PGM
D0
D1
D2
D3
D4
D5
D6
D7
-5v
+12v
TITLE:
2708 / TMS2716 programmer
REV: 1.0
Company: Peardrop Design Systems
Sheet: 1/1
Date: 2025-04-05
Drawn By: Keith
EasyEDA

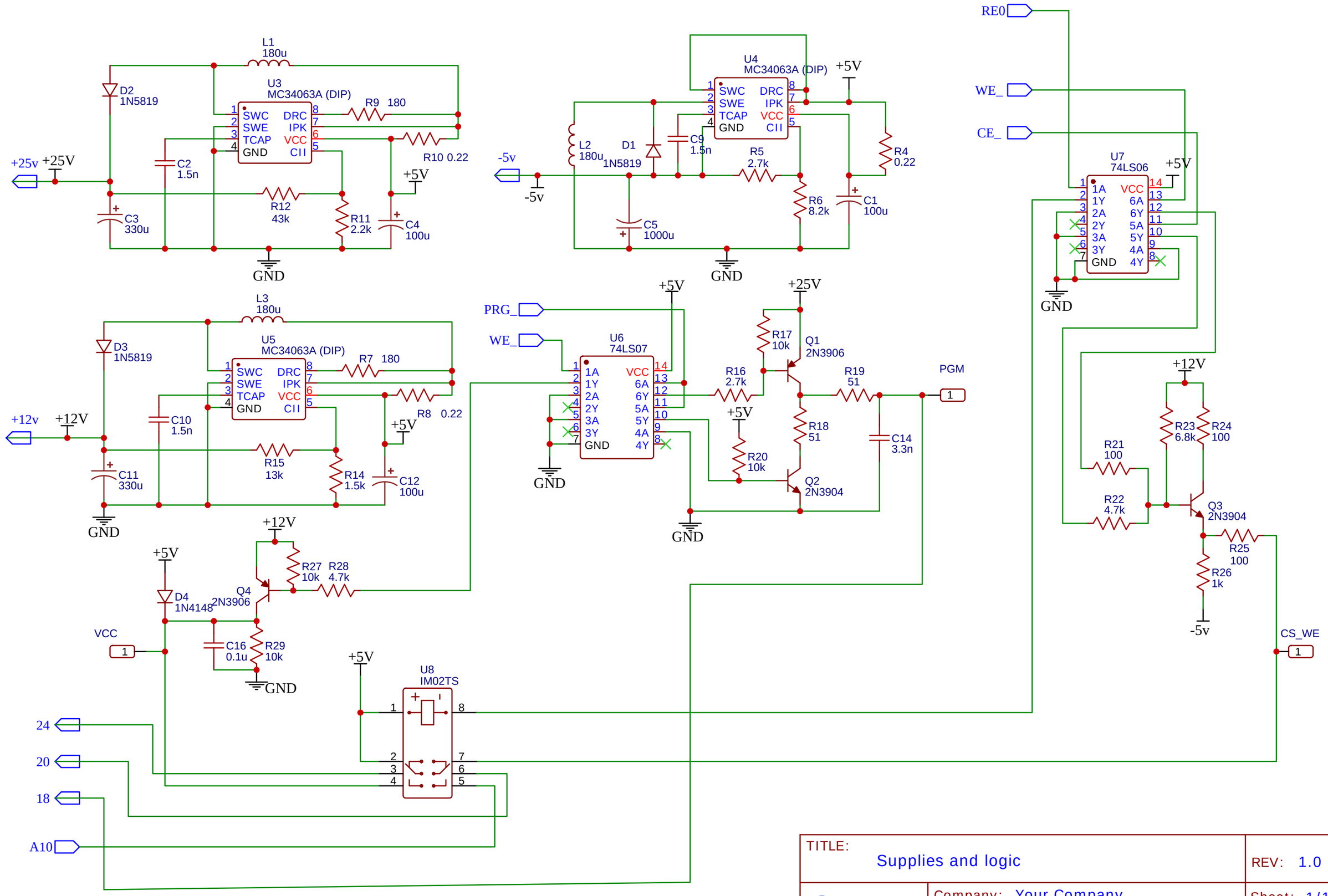

TITLE: Supplies and logic

REV: 1.0

Company: Your Company

Sheet: 1/1

Date: 2025-02-17

Drawn By: Keith